2016 Catalog

Bergstrom Standard Products

Climate Control Systems

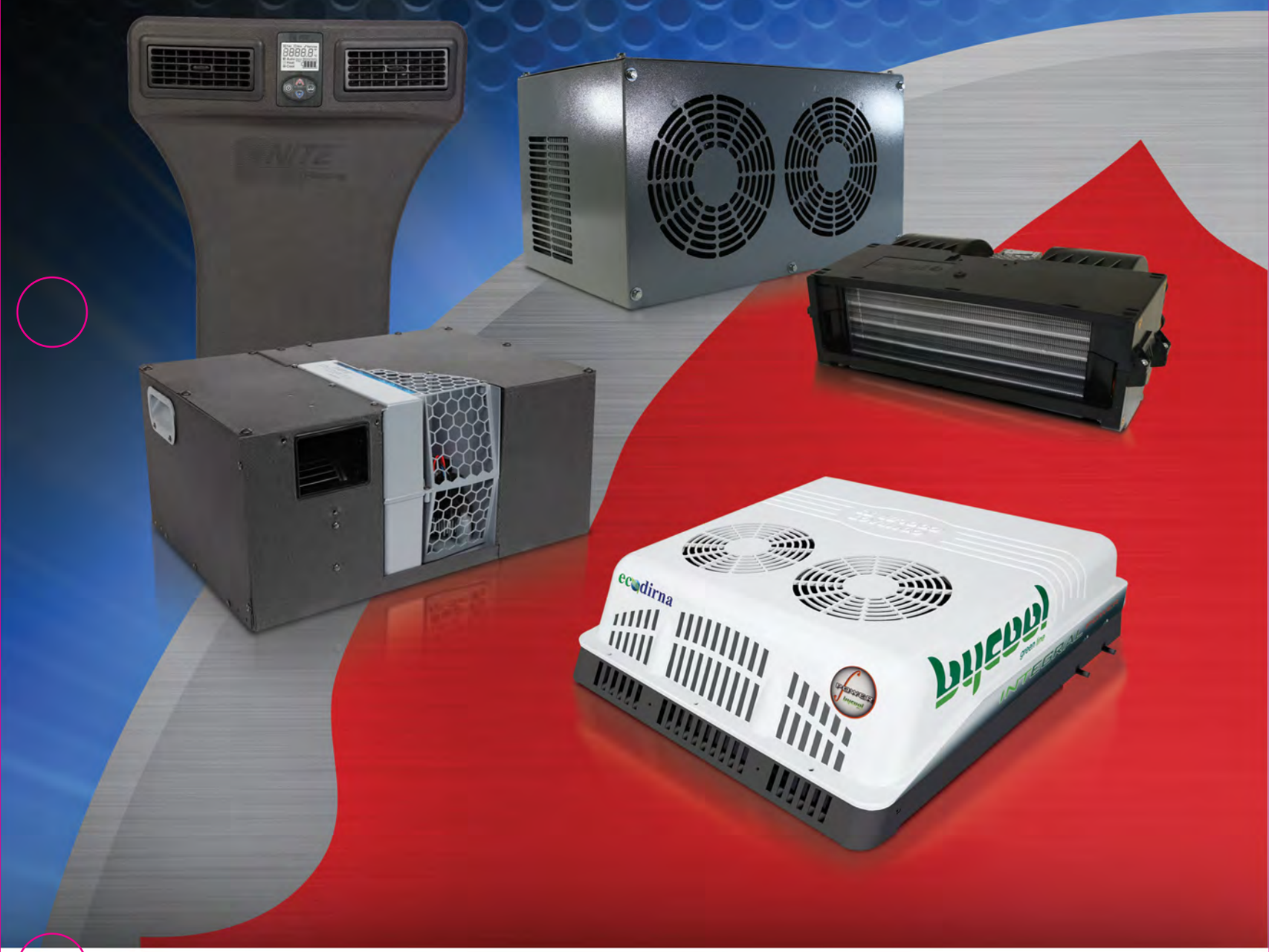

Bergstrom®

© Bergstrom, Inc. 2016. All rights reserved.

COPYRIGHT AND TRADEMARK
All copyrights, trademarks, trade names, logos, and service marks (the “marks”) displayed in this catalog are Bergstrom’s property or the property of other third parties. User is not permitted to use these marks without Bergstrom’s prior written consent or the consent of such third parties that may own the marks.

NOTICE
The illustrations and photographs appearing in this catalog are intended for illustration purposes only. The information and data contained in this catalog was obtained from reliable sources and was believed to be accurate at the time of printing. However, Bergstrom, Inc. makes no warranty, express or implied, including but not limited to any warranty of merchantability or fitness for any particular purpose with respect to the accuracy of the information and data contained in this catalog. The products offered in this catalog are intended for use as manufactured and should never be modified or altered for other purposes or applications. Product availability and information shown in this catalog is subject to change without notice.

Table of Contents

SUGGESTED VEHICLE APPLICATIONS LEGEND 3

BSP SYSTEMS MATRIX 4

NO-IDLE SYSTEMS 7
- NITE® Phoenix 9

BATTERY-OPERATED ELECTRIFIED SYSTEMS 11
- Compact 1.4 13
- Compact 2.0 15
- Compact 3.0 17
- DBAC-100 19
- DBAC-200 21
- Dinamic 1.1 23
- Integral Power ATC 25
- Integral Power ATC Hatch 27
- Integral Power Manual 29
- Split 2.0 and 3.0 31

ROOFTOP SYSTEMS 33
- Farad 35
- HD-1000 A/C 37
- HD-1000 HVAC 39
- KA-300 41
- KA-2000 43
- KA-3000 45

HEADLINER SYSTEMS 47
- KA-400 SlimLine 49
- KK-400 SlimLine 51
- KA-500 HardHat 53
- KA-7100 55
- KA-7300 57
- Kelvin A/C 59
- Kelvin HVAC 61
- Pascal A/C 63

BACKWALL SYSTEMS 65
- KA-550 Slimline 67
- KK-550 Slimline 69
- KK-600 BackPack 71
- KA-710 SideKick 73
- Vertical Grande A/C 75
- Vertical Grande HVAC 77

CONDENSERS 79
- DBC-100 81
- KC-90 83
- KC-110 85
- KC-440 87
- KC-500 89
- KC-750 91
- KC-800 Super Air 93
- KC-900 Super Air Plus 95
- KC-1010 97
- KC-3000 99

HEATER SYSTEMS 101
- KH-150 103
- KH-200 105
- KH-300 107
- KH-500 109
- Pascal Heater 111

SYSTEM KIT OPTIONS 113
- HD-1000, Black Hardware Kit 115
- KA-300, Black Hardware Kit 115
- KC-90, Black Hardware Kit 115
- KC-110, Black Hardware Kit 115
- Kelvin Fascia Options and Brackets 116
- Pascal Fascia Options and Brackets 116

BERGSTROM ELECTRIFIED SYSTEMS (BES) 117
- F-Series 119
- FFR6 HVAC System 121
- FVF120 Pressurizer 123
- FVV50 Pressurizer 125
- FVV60 Pressurizer 127
- FVV150 Pressurizer 129
- FVW100 Pressurizer 131
- M-Series 133
- MPV5 HVAC System 135
- MPV9 HVAC System 137
- T-Series 139
- TBV6 Hydraulic Compressor 141
- TCR6 Condenser Package 143
- TDR5 HVAC System 145
- TPR6 A/C System 147
- TPW5 HVAC System 149

INDEX 151

© 2016 Bergstrom, Inc.

Suggested Vehicle Applications Legend

- Agriculture Vehicles
- Ambulances
- Cargo Handling Vehicles (Container and Port Vehicles)
- Delivery Trucks/Vans
- Foundry
- Golf Carts
- Hi-Lo (Forklifts)
- Military Vehicles
- Off-Road Vehicles
- School Buses
- Shuttle Buses
- UTV (Electrical Vehicles)
- Airport Vehicles (Ground Support)
- Armored Vehicles
- Construction Vehicles
- Fire Trucks
- Garbage Trucks
- Heavy-Duty Vehicles
- Logging Vehicles
- Mining Vehicles
- Off-Shore Drilling
- Semi Truck
- Surveillance Vehicles

© 2016 Bergstrom, Inc.

BSP Systems Matrix

The legend is a quick guide to help select a system for your vehicle. Understanding no two applications are alike, Bergstrom strongly recommends contacting a regional sales manager for further discussions before placing an order. A system in our catalog and not identified as a suggested application may be the optimal solution.

System	Pg. Nbr.	Power	Agriculture Vehicles	Airport Vehicles	Ambulances	Armored Vehicles	Cargo Handling Vehicles	Construction Vehicles	Delivery Trucks / Vans	Fire Trucks	Garbage Trucks	Golf Carts	Heavy-Duty Vehicles	Hi-Lo Vehices (Forklifts)	Military Vehicles	Mining Vehicles	Off-Road Vehicles	School Bus	Shuttle Bus	Semi Truck	UTV (Electrical Vehicles)
No-Idle Systems																					
Nite® Phoenix	9	12V: 7,500 BTU/hr (2,2 kW)							X						X						
Battery-Operated Systems																					
Compact 1.4	13	12V / 24V: 4,777 BTU/hr (1,4 kW)										X		X							X
Compact 2.0	15	12V: 6,824 BTU/hr (2,0 kW)										X		X							X
Compact 3.0	17	24V: 10,236 BTU/hr (3,0 kW)										X		X							X
DBAC-100	19	12V: 6,824 BTU/hr (2,0 kW) 24V: 10,919 BTU/hr (3,2 kW)	X					X								X					
DBAC-200	21	12V: 6,824 BTU/hr (2,0 kW) 24V: 10,919 BTU/hr (3,2 kW)	X					X								X					
Dinamic	23	12V / 24V: 3,853 BTU/hr (1,05 kW)	X					X					X			X					
Integral Power	25	12V: 6,824 BTU/hr (2,0 kW) 24V: 10,919 BTU/hr (3,2 kW)	X					X					X	X		X	X				
Integral Power ATC Hatch	27	12V: 6,824 BTU/hr (2,0 kW) 24V: 10,919 BTU/hr (3,2 kW)	X					X					X	X		X	X				
Integral Power Manual	29	12V: 6,824 BTU/hr (2,0 kW) 24V: 10,919 BTU/hr (3,2 kW)	X					X					X	X		X	X				
Split 2.0 and 3.0	31	12V: 6,824 BTU/hr (2,0 kW) 24V: 10,919 BTU/hr (3,2 kW)	X					X					X	X		X	X				
Rooftop																					
Farad	35	12V: 30,027 BTU/hr (8,8 kW)									X										
HD-1000 A/C	37	12V /24V: 25,932 BTU/hr (7,6 kW)	X					X					X			X	X				
HD-1000 HVAC	39	Cold 12V / 24V: 25,932 BTU/hr (7,6 kW) Hot 12V / 24V: 34,120 BTU/hr (10,0 kW	X					X					X			X	X				
KA-300	41	12V / 24V:18,900 BTU/hr (5,5 kW)	X					X			X		X								
KA-2000	43	12V / 24V:20,130 BTU/hr (5,9 kW)	X					X	X				X				X				
KA-3000	45	Evap 12V: 23,332 BTU/hr (9,6 kW) Cond 12V: 35,860 BTU/hr (10,5 kW)			X	X			X									X			
Headliner																					
KA-400 SlimLine	49	12V /24V: 21,838 BTU/hr (6,4 kW)	X					X					X	X					X		
KK-400 SlimLine	51	Cold 12V / 24V: 21,838 BTU/hr (6,4 kW) Hot 12V / 24V: 25,933 BTU/hr (7,6 kW)	X					X					X	X					X		
KA-500 HardHat	53	12V / 24V: 25,345 BTU/hr (8,6 kW)	X					X					X			X					
KA-7100	55	12V: 49,500 BTU/hr (14,5 kW)	X					X					X					X	X		
KA-7300	57	12V: 75,408 BTU/hr (22,1 kW)	X					X					X					X	X		
Kelvin A/C	59	12V / 24V: 20,810 BTU/hr (6,1 kW)	X		X			X		X				X					X		
Kelvin HVAC	61	Cold 12V / 24V: 20,180 BTU/hr (6,1 kW) Hot 12V / 24V: 32,410 BTU/hr (9,6 kW)	X		X			X		X				X					X		
Pascal A/C	63	12V / 24V: 13,650 BTU/hr (4,0 kW)	X		X			X		X				X					X		

© 2016 Bergstrom, Inc.

System	Pg. Nbr.	Power	Agriculture Vehicles	Airport Vehicles	Ambulances	Armored Vehicles	Cargo Handling Vehicles	Construction Vehicles	Delivery Trucks / Vans	Fire Trucks	Garbage Trucks	Golf Carts	Heavy-Duty Vehicles	Hi-Lo Vehices (Forklifts)	Military Vehicles	Mining Vehicles	Off-Road Vehicles	School Bus	Shuttle Bus	Semi Truck	UTV (Electrical Vehicles)
Backwall																					
KA-550	67	12V / 24V: 19,449 BTU/hr (5,7 kW)	X					X					X						X		
KK-550	69	Cold 12V / 24V: 19,449 BTU/hr (9,8 kW) Hot 12V / 24V: 33,500 BTU/hr (9,8 kW)	X					X					X						X		
KK-600 BackPack	71	Cold 12V / 24V: 33,439 BTU/hr (9.8 kW) Hot 12V / 24V: 47,770 BTU/hr (14,0 kW)	X			X		X	X				X			X			X		
KA-710 SideKick	73	12V / 24V: 24,500 BTU/hr (7,2 kW)	X					X					X						X		
Vertical Grande A/C	75	12V / 24V: 28,320 BTU/hr (8,3 kW)	X		X			X													
Vertical Grande HVAC	77	Cold 12V / 24V: 28,320 BTU/hr (8.3kW) Hot 12V / 24V: 19,110 BTU/hr (5,6 kW)	X		X			X													
Condensers																					
DBC-100	81	12V: 6,824 BTU/hr (2,0 kW) 24V: 10,919 BTU/hr (3,2 kW)	X					X								X					
KC-90	83	12V / 24V: 25,933 BTU/hr (7,6 kW)						X					X						X		
KC-110	85	12V / 24V: 45,040 BTU/hr (13,2 kW)			X								X				X		X		
KC-440	87	12V: 54,935 BTU/hr (16,1 kW)	X					X		X			X			X					
KC-500	89	12V / 24V: 30,000 BTU/hr (8,8 kW)	X					X		X			X			X					
KC-750	91	12V / 24V: 32,075 BTU/hr (9,4 kW)	X					X					X			X	X		X		
KC-800 Super Air	93	12V / 24V: 45,000 BTU/hr (13,2 kW)	X					X	X				X			X		X			
KC-900 Super Air Plus	95	12V: 60,000 BTU/hr (17,6 kW)	X					X	X				X			X		X			
KC-1010	97	12V / 24V: 45,040 BTU/hr (13,2 kW)	X					X					X			X					
KC-3000	99	12V: 35,860 BTU/hr (10,5 kW)			X								X						X		
Heater Systems																					
KH-150	103	12V: 13,000 BTU/hr (3,8 kW)						X					X			X			X		
KH-200	105	12V / 24V: 18,360 BTU/hr (5,4 kW)						X					X			X					
KH-300	107	12V / 24V: 30,027 BTU/hr (8,8 kW)						X		X			X			X		X			
KH-500	109	12V / 24V: 52,206 BTU/hr (15,3 kW)						X					X			X					
Pascal Heater	111	12V / 24V: 25,590 BTU/hr (8,0 kW)	X		X			X		X				X					X		
Bergstrom Electrified Systems (BES)																					
FFR6 HVAC System	121						X									X					
FVF120 Pressurizer	123						X									X					
FVV150 Pressurizer	125						X									X					
FVV60 Pressurizer	127						X									X					
FVV150 Pressurizer	129						X									X					
FVW100 Pressurizer	131						X									X					
MPV5 HVAC System	135	Cold : 18,000 BTU/hr (5,3 kW) Hot: 34,000 BTU/h (10,0 kW)					X									X					
MPV9 HVAC System	137	Cold: 30,369 BTU/hr (8,9 kW) Hot: 40,946 BTU/hr (12,0 kW)					X									X					
TBV6 Hydraulic Compressor	141						X									X					
TCR6 Condenser Package	143	For use up to 22,000 BTU/hr (6,4 kW)					X									X					
TDR5 HVAC System	145	Cold 24V: 17,744 BTU/hr (5,2 kW) Hot 24V: 34,122 BTU/hr (10,0 kW)					X									X					
TPR6 A/C System	147	Cold 24V: 20,473 BTU/hr (6,0 kW) Hot 24V: 40,000 BTU/hr (11,7 kW)					X	X	X							X					
TPW5 HVAC System	149	Cold 24V: 18,000 BTU/hr (5,3 kw) Hot 24V: 40,000 BTU/hr (11,7 kW)					X	X								X					

© 2016 Bergstrom, Inc.

NOTES:

© 2016 Bergstrom, Inc.

No-Idle Systems

NITE® PHOENIX 9

© 2016 Bergstrom, Inc.

Features

- Electrified A/C unit that runs on 4 auxiliary AGM batteries
- Automatic temperature control
- Digital control
- Durable steel construction
- ARB approved (#08-643-004)
- Unit runs 8-10 hours*
- Evaporator filter gives extended coil life
- Optional diesel-sipping heaters are available

Air Distribution and Control Panel

**Run time depends on ambient temperature, solar load and truck insulation*

Suggested Applications

Line Drawing

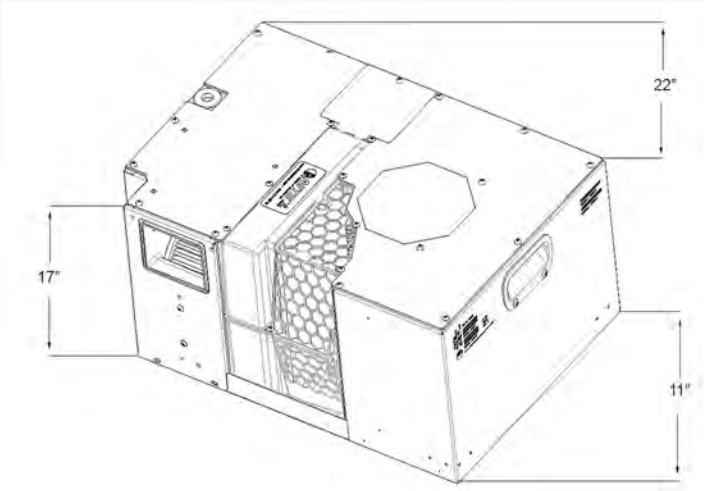

Technical Specifications

Model	NITE Phoenix 12V
Voltage	12V
Power	7,500 BTU/hr (2,2 kW)
Amps	25 A/h - 65 Ah
Maximum air flow	280 SCFM (425 m^3/hr)
Dimensions (W x H x D)	22in x 17in x 11in (559mm x 432mm x 280mm)
Weight*	60 lbs. (27,2 kg)
Mounting Position	Under Bunk

*Overall system weight will vary dependent on installation kit used, batteries and battery box options.

Measurements are listed using the U.S. system with the metric system in parenthesis.

Minimum alternator required: ***12V*** *= 30A/h above factory specifications is required*
Minimum battery required: ***4 AGM deep cycle batteries***

© 2016 Bergstrom, Inc.

Dimensions layout

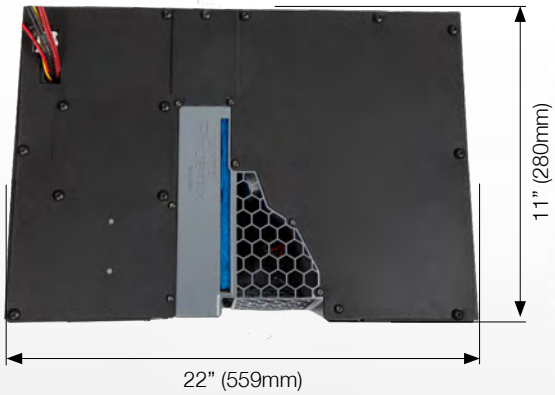

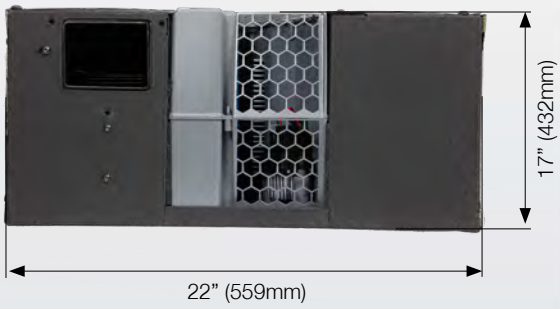

NITE® Phoenix Order Guide

Part*	Part Number	Notes
Unit Part Number	3620007 3620002 3620003	A/C Only Combo with Espar Heater Combo with Webasto Heater
Installation Kit	Contact your Regional Sales Manager to choose the right kit for your vehicle.	
Evaporator Blower Service Kit Assembly	4475070	12V
Temperature Sensor Kit	4475028	12V
Condenser Fan Service Kit	4475037	12V
Filter (259 x 215 x 127)	4475023	12V
Relay with Resistor	4499087	12V

* For the complete NITE service parts lists, please visit us.bergstrominc.com/nite-service-parts/. Reference these parts lists before ordering as they are updated on a continuous basis and are subject to change without notice.

Advantages

- Operator Comfort
- Perfect match for your vehicle
- Best Value
- Very durable structure
- Virtually maintenance free
- Installs easily under the bunk
- Shorepower & hotel load options available

LCD Display

Bergstrom STANDARD PRODUCTS
2390 Blackhawk Rd.
PO Box 6007
Rockford, IL 61125
866.507.9773
bergstrominc.com

Warranty

- 2-year limited warranty on parts and systems

© 2016 Bergstrom, Inc.

Battery-Operated Electrified Systems

COMPACT 1.4. 13

COMPACT 2.0. 15

COMPACT 3.0. 17

DBAC-100. 19

DBAC-200. 21

DINAMIC 1.1 23

INTEGRAL POWER ATC 25

INTEGRAL POWER ATC HATCH 27

INTEGRAL POWER MANUAL . . . 29

SPLIT 2.0 AND 3.0 31

© 2016 Bergstrom, Inc.

Features

- Digital thermometer (in °C & °F) with automatic temperature control
- Pre-charged system with R-134a refrigerant
- Automatic shut-off at low voltage
- Need a DC/DC converter to change vehicle voltage to 24V
- Remote control

Battery-Operated

Air Distribution and Control Panel

Suggested Applications

Line Drawing

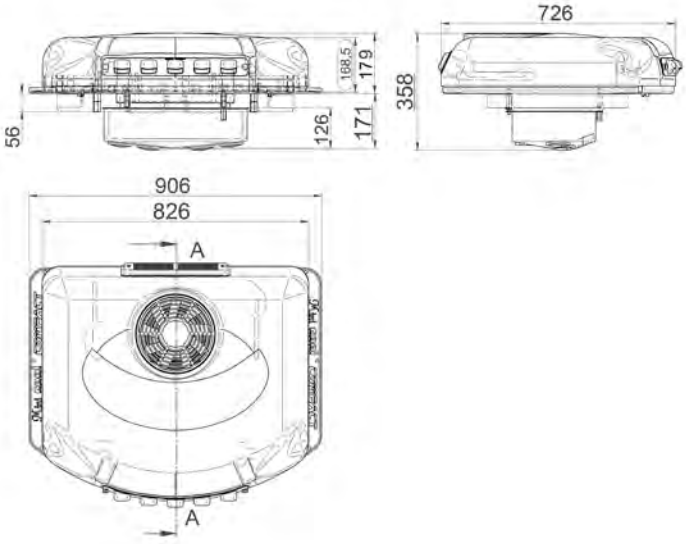

Technical Specifications

Model	Compact 1.4 12V	Compact 1.4 24V
Voltage	12V	24V
Power*	4,777 BTU/hr (1,4 kW)	4,777 BTU/hr (1,4 kW)
Amps**	18 A/h - 28 A/h	10.5 A/h - 18 A/h
Maximum air flow	470 SCFM (800 m³/hr)	470 SCFM (800 m³/hr)
Dimensions (L x W x H)	28.58in x 32.52in x 7.05in (726mm x 826mm x 179mm)	28.58in x 32.52in x 7.05in (726mm x 826mm x 179mm)
Weight	65.9 lbs. (29,9 kg)	65.9 lbs. (29,9 kg)
Mounting Position	Roof	Roof

(*) System output (BTU/hr) is based on system component-calculated capacities. In accordance with JIS standard test conditions: outside temperature 95°F (35°C), return temperature 80°F (27°C).

(**) Test conditions: outside temperature between 86°F (30°C) and 107°F (42°C).

Measurements are listed using the U.S. system with the metric system in parenthesis.

© 2016 Bergstrom, Inc.

Dimensions layout

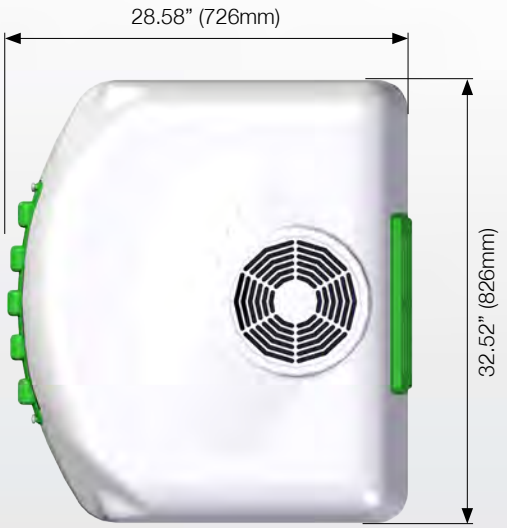

Compact 1.4 Order Guide

Part	Part Number	Notes
Unit Part Number*	BSP00005AC12 BSP00005AC24	12V 24V
Blower Assembly	091099C002 091087C006	12V 24V
Condenser	091087C010 091087C010	12V 24V
Condenser Fan	091099C004 091087C014	12V 24V
Compressor	091087C008 091087C008	12V 24V
Evaporator	091132C006 091132C006	12V 24V

*Installation kit included with system

Advantages

- Operator Comfort
- Reduced fuel costs due to no idling
- Built to last
- Very durable structure
- Virtually maintenance free
- Powerful electric compressor unit

Remote Control

Standard Console Installed

Bergstrom STANDARD PRODUCTS

2390 Blackhawk Rd.
PO Box 6007
Rockford, IL 61125
866.507.9773
bergstrominc.com

Warranty

- 2-year limited warranty on parts and systems

© 2016 Bergstrom, Inc.

Features

- Digital thermometer (in °C & °F) with automatic temperature control
- Pre-charged system with R-134a refrigerant
- Automatic shut-off at low voltage
- Need a DC/DC converter to change vehicle voltage to 24V
- Remote control

Battery-Operated

Air Distribution and Control Panel

Suggested Applications

Line Drawing

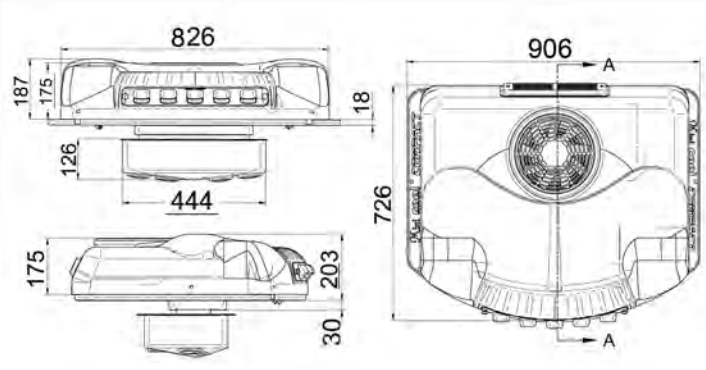

Technical Specifications

Model	Compact 2.0 12V
Voltage	12V
Power*	6,824 BTU/hr (2,0 kW)
Amps**	22 A/h - 64 A/h
Maximum air flow	470 SCFM (800 m^3/hr)
Dimensions (L x W x H)	28.58in x 35.67in x 7.99in (726mm x 906mm x 203mm)
Weight	88.2 lbs. (40,0 kg)
Mounting Position	Roof

(*) System output (BTU/hr) is based on system component-calculated capacities. In accordance with JIS standard test conditions: outside temperature 95°F (35°C), return temperature 80°F (27°C).

(**) Test conditions: outside temperature between 86°F (30°C) and 107°F (42°C).

Measurements are listed using the U.S. system with the metric system in parenthesis.

Minimum alternator required: ***120 A/h***

© 2016 Bergstrom, Inc.

Dimensions layout

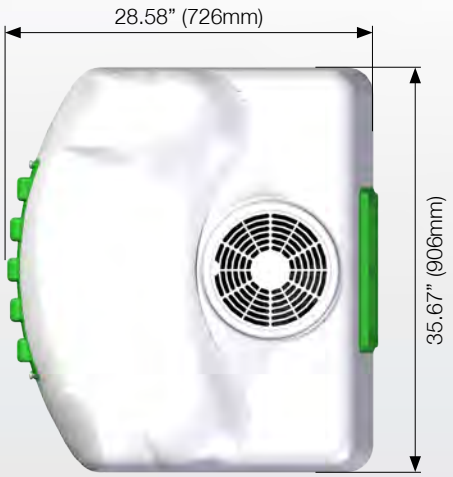

Compact 2.0 Order Guide

Part	Part Number	Notes
Unit Part Number*	BSP00030AC12	12V
Blower Assembly	091099C002	12V
Condenser	091132C003	12V
Condenser Fan	091099C004	12V
Compressor	091135C002	12V
Evaporator	091132C006	12V

*Installation kit included with system

Advantages

- Operator Comfort
- Fuel savings due to no idling
- Built to last
- Very durable structure
- Virtually maintenance free
- Powerful electric compressor unit

Remote Control

Standard Console Installed

Bergstrom STANDARD PRODUCTS

2390 Blackhawk Rd.
PO Box 6007
Rockford, IL 61125
866.507.9773
bergstrominc.com

Warranty

- 2-year limited warranty on parts and systems

© 2016 Bergstrom, Inc.

Features

- Digital thermometer (in °C & °F) with automatic temperature control
- Pre-charged system with R-134a refrigerant
- Double battery protection
- Need a DC/DC converter to change vehicle voltage to 24V
- Remote control

Air Distribution and Control Panel

Suggested Applications

Line Drawing

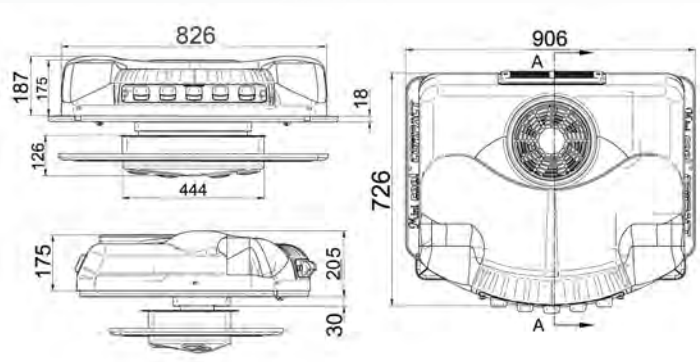

Technical Specifications

Model	Compact 3.0 24V
Voltage	24V
Power*	10,236 BTU/hr (3,0 kW)
Amps**	Engine On: 25 A/h - 38 A/h Engine Off: 11 A/h - 24 A/h
Maximum air flow	470 SCFM (800 m³/hr)
Dimensions (L x W x H)	28.58in x 32.52in x 8.07in (726mm x 826mm x 205mm)
Weight	86.6 lbs. (39,3 kg)
Mounting Position	Roof

(*) System output (BTU/hr) is based on system component-calculated capacities. In accordance with JIS standard test conditions: outside temperature 95°F (35°C), return temperature 80°F (27°C).

(**) Test conditions: outside temperature between 86°F (30°C) and 107°F (42°C).

Measurements are listed using the U.S. system with the metric system in parenthesis.

Unit performance with the engine running is 10,248 BTU/hr and with the engine switched off the performance is limited to 4,800 BTU/hr to protect the vehicle battery.

Minimum alternator required: ***80 A/h***
Minimum battery required: ***180 A/h***

© 2016 Bergstrom, Inc.

Dimensions layout

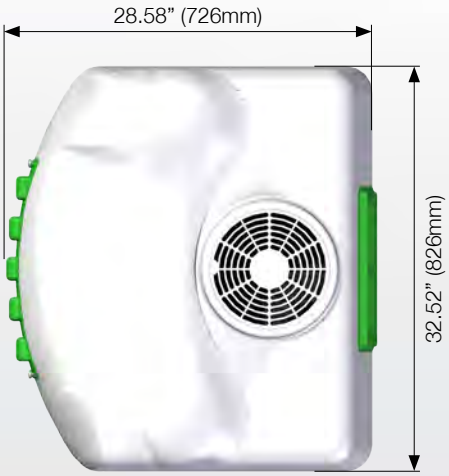

Compact 3.0 Order Guide

Part	Part Number	Notes
Unit Part Number*	BSP00006AC24	24V
Blower Assembly	091087C006	24V
Condenser	091132C003	24V
Condenser Fan	091132C021	24V
Compressor	091132C004	24V
Evaporator	091132C006	24V

*Installation kit included with system

Advantages

- Operator Comfort
- Perfect match for your vehicle
- Fuel savings due to no idling
- Very durable structure
- Virtually maintenance free
- Powerful electric compressor unit
- Built to last

Remote Control

Standard Console Installed

Bergstrom STANDARD PRODUCTS

2390 Blackhawk Rd.
PO Box 6007
Rockford, IL 61125
866.507.9773
bergstrominc.com

Warranty

- 2-year limited warranty on parts and systems

© 2016 Bergstrom, Inc.

DBC-100 condenser and compressor unit is paired with Vertical Grande evaporator

Features

- All-metal frame condenser
- All-metal evaporator except for plastic outlet panel
- Double wheel high performance blower
- Virtually maintenance free
- Quiet operation
- 3 air outlets
- 3 speed fans
- Air distribution panel incorporated into the unit.
- Need a DC/DC converter to change vehicle voltage to 24V

Battery-Operated

Air Distribution and Control Panel

Suggested Applications

Line Drawing

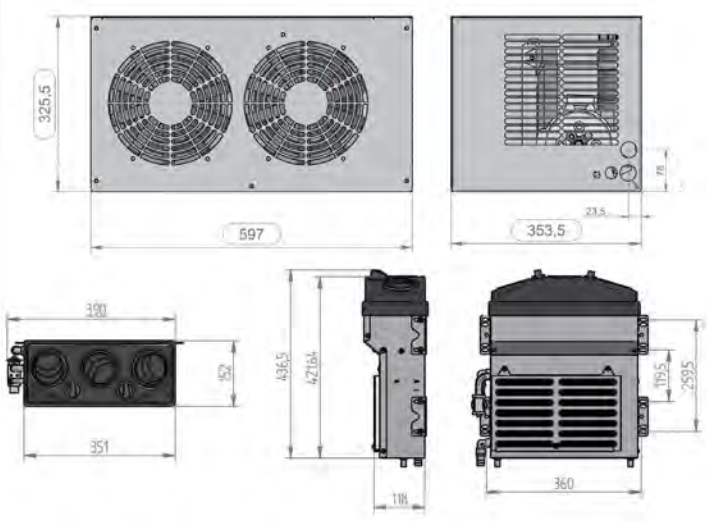

Technical Specifications

Model	DBAC-100 12V	DBAC-100 24V
Voltage	12V	24V
Power*	6,824 BTU/hr (2,0 kW)	10,919 BTU/hr (3,2 kW)
Amps**	32 A/h - 48 A/h	27 A/h - 35 A/h
Maximum air flow	460 SCFM (780 m³/hr)	460 SCFM (780 m³/hr)
Vertical Grande Dimensions (L x W x H)	15.35in x 5.98in x 17.2in (390mm x 152mm x 436.55mm)	15.35in x 5.98in x 17.2in (390mm x 152mm x 436.55mm)
Dimensions (L x W x H)	23.50in x 13.92in x 12.81in (597mm x 353.5mm x 325.5mm)	23.50in x 13.92in x 12.81in (597mm x 353.5mm x 325.5mm)
Weight	Vertical Grande: 21.6 lbs. (9.8 kg) DBC-100: 72.8 lbs. (33 kg)	Vertical Grande: 21.6 lbs. (9.8 kg) DBC-100: 72.8 lbs. (33 kg)
Mounting Position	Vertical Grande: Wall DBC-100: Wall or Chassis	Vertical Grande: Wall DBC-100: Wall or Chassis

(*) System output (BTU/hr) is based on system component-calculated capacities. In accordance with JIS standard test conditions: outside temperature 95°F (35°C), return temperature 80°F (27°C).

(**) Test conditions: outside temperature between 86°F (30°C) and 107°F (42°C).

Measurements are listed using the U.S. system with the metric system in parenthesis.

© 2016 Bergstrom, Inc.

Dimensions layout

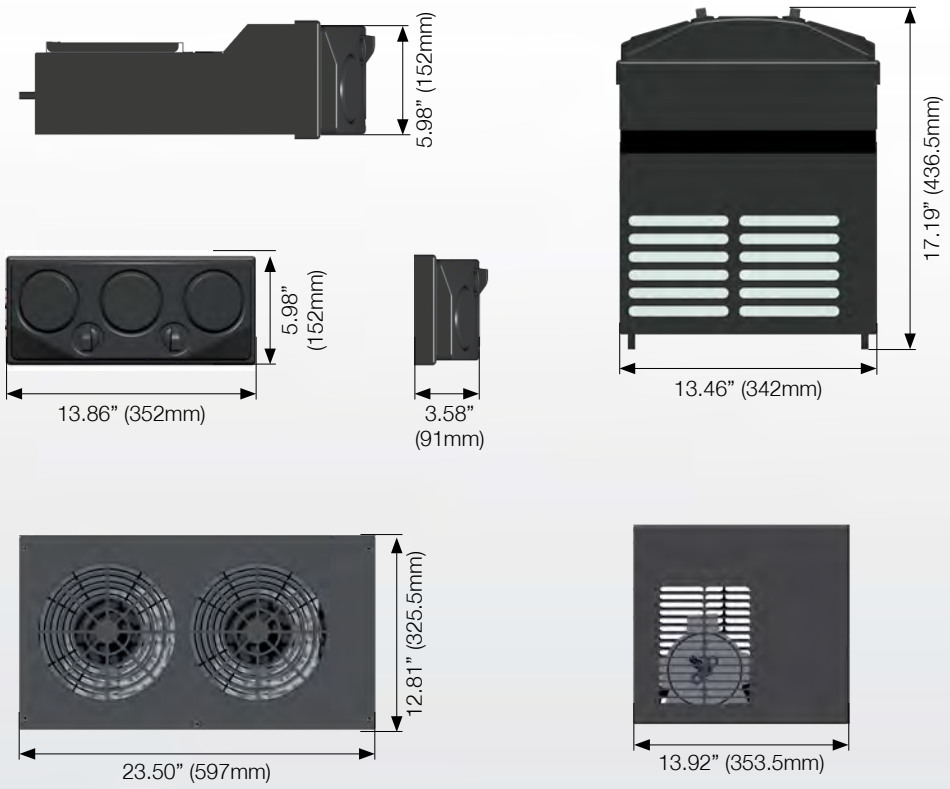

DBAC-100 Order Guide

Part	Part Number	Notes
Unit Part Number*	BSP00024AC12 BSP00024AC24	12V 24V
Blower Motor	1000777603 1000783637	12V 24V
Resistor	2099027 2099027	12V 24V
Receiver Drier	1741330000 1741330000	12V 24V
Evaporator	1000763896 1000763896	12V 24V
Condenser	270501000 270501000	12V 24V
Condenser Fan	1752050000 1753010000	12V 24V
Compressor	1108100014 1108100015	12V 24V
Relay	1749010000 1749310000	12V 24V
Switch (Binary)	1211670000 1211670000	12V 24V

*Installation kit included with system

Advantages

- Operator Comfort
- Perfect match for your vehicle
- Best value of price and efficiency
- Very durable structure
- Virtually maintenance free
- Powerful electric compressor unit

Bergstrom STANDARD PRODUCTS
2390 Blackhawk Rd.
PO Box 6007
Rockford, IL 61125
866.507.9773
bergstrominc.com

Warranty

- 2-year limited warranty on parts and systems

© 2016 Bergstrom, Inc.

DBC-100 condenser and compressor unit is paired with Pascal evaporator

Features

- All-metal frame condenser
- All-metal evaporator except for plastic outlet panel
- Double wheel high performance blower
- Virtually maintenance free
- Quiet operation
- 3 air outlets
- 3 fan speeds
- Need a DC/DC converter to change vehicle voltage to 24V

Air Distribution Panel

Spigot

Louver

See other available panel options on page 116.

Suggested Applications

Line Drawing

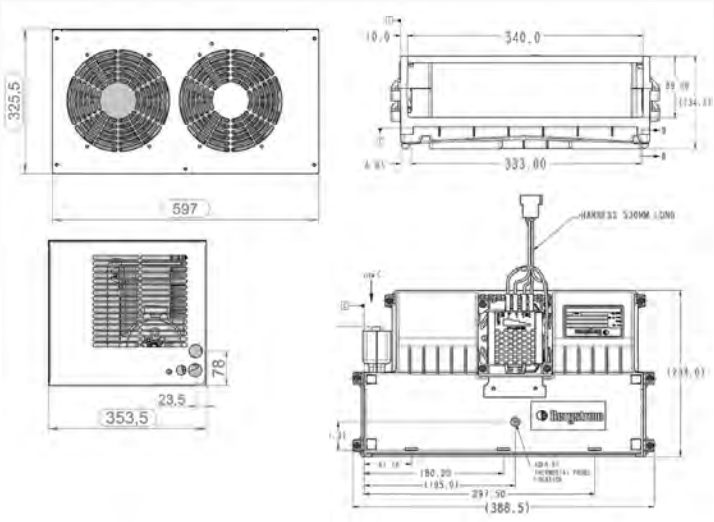

Technical Specifications

Model	DBAC-200 12V	DBAC-200 24V
Voltage	12V	24V
Power*	6,824 BTU/hr (2,0 kW)	10,919 BTU/hr (3,2 kW)
Amps**	32 A/h - 48 A/h	27 A/h - 35 A/h
Maximum air flow	260 SCFM (450 m³/hr)	260 SCFM (450 m³/hr)
Pascal Dimensions (L x W x H)	9.25in x 15.35in x 5.31in (235mm x 389.9mm x 134.9mm)	9.25in x 15.35in x 5.31in (235mm x 389.9mm x 134.9mm)
DBC-100 Dimensions (L x W x H)	23.50in x 13.92in x 12.81in (597mm x 353.5mm x 325.5mm)	23.50in x 13.92in x 12.81in (597mm x 353.5mm x 325.5mm)
Weight	Pascal: 8.4 lbs. (3,8 kg) DBC-100: 72.8 lbs. (33 kg)	Pascal: 8.4 lbs. (3,8 kg) DBC-100: 72.8 lbs. (33 kg)
Mounting Position	Pascal: Headliner or Under seat DBC-100: Wall or Chassis	Pascal: Headliner or Under seat DBC-100: Wall or Chassis

(*) System output (BTU/hr) is based on system component-calculated capacities. In accordance with JIS standard test conditions: outside temperature 95°F (35°C), return temperature 80°F (27°C).

(**) Test conditions: outside temperature between 86°F (30°C) and 107°F (42°C).

Measurements are listed using the U.S. system with the metric system in parenthesis.

© 2016 Bergstrom, Inc.

Dimensions layout

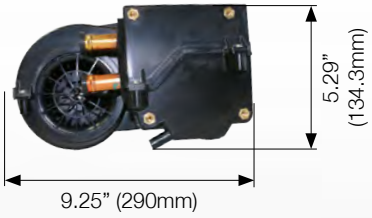

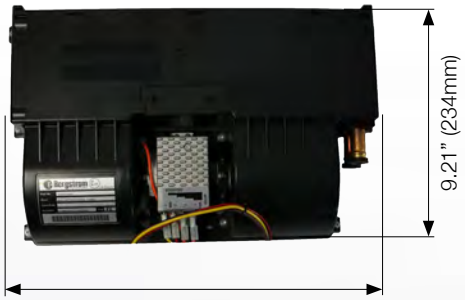

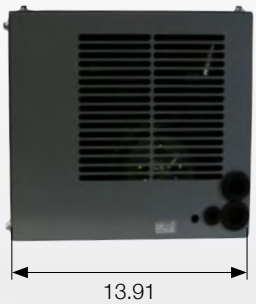

DBAC-200 Order Guide

Part	Part Number	Notes
Unit Part Number	BSP00040AC12 BSP00040AC24	12V 24V
Blower Motor	1000777603 1000783637	12V 24V
Resistor	2099027 2099027	12V 24V
Receiver Drier	1741330000 1741330000	12V 24V
Evaporator	1000763896 1000763896	12V 24V
Condenser	270501000 270501000	12V 24V
Condenser Fan	1752050000 1753010000	12V 24V
Compressor	1108100014 1108100015	12V 24V
Relay	1749010000 1749310000	12V 24V
Switch	1211670000 1211670000	12V 24V

*Installation kit included with system

Advantages

- Operator Comfort
- Perfect match for your vehicle
- Best Value
- Very durable structure
- Virtually maintenance free
- Powerful electric compressor unit

Bergstrom STANDARD PRODUCTS
2390 Blackhawk Rd.
PO Box 6007
Rockford, IL 61125
866.507.9773
bergstrominc.com

Warranty

- 2-year limited warranty on parts and systems

© 2016 Bergstrom, Inc.

Features

- Manual and automatic function
- Digital thermometer (in °C & °F)
- Interior control panel with electronic display
- Remote control
- Double battery protection

Battery-Operated

Air Distribution and Control Panel

Suggested Applications

Line Drawing

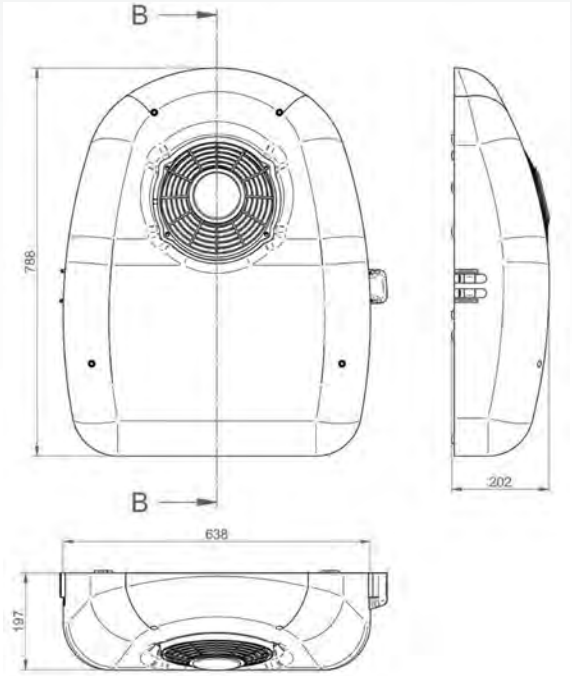

Technical Specifications

Model	Dinamic 12V	Dinamic 24V
Voltage	12V	24V
Power*	3,853 BTU/hr (1,05 kW)	3,853 BTU/hr (1,05 kW)
Amps**	12 A/h - 27 A/h	9.5 A/h - 16 A/h
Maximum air flow	247 SCFM (420 m³/hr)	247 SCFM (420 m³/hr)
Condenser Dimensions (H x W x D)	31.0in x 25.1in x 8.0in (788mm x 638mm x 202mm)	31.0in x 25.1in x 8.0in (788mm x 638mm x 202mm)
Evaporator Dimensions (L x W x H)	12.1in x 25.6in x 5.0in (308mm x 650mm x 128mm)	12.1in x 25.6in x 5.0in (308mm x 650mm x 128mm)
Weight	Condenser: 47.4 lbs. (21,5kg) Evaporator: 11 lbs. (5kg)	Condenser: 47.4 lbs. (21,5kg) Evaporator: 11 lbs. (5kg)
Mounting Position	Back Wall	Back Wall

(*) System output (BTU/hr) is based on system component-calculated capacities in accordance with JIS standard test conditions: outside temperature 95°F (35°C), return temperature 80°F (27°C).

(**) Test conditions: outside temperature between 86°F (30°C) and 107°F (42°C).

Measurements are listed using the U.S. system with the metric system in parenthesis.

© 2016 Bergstrom, Inc.

Dimensions layout

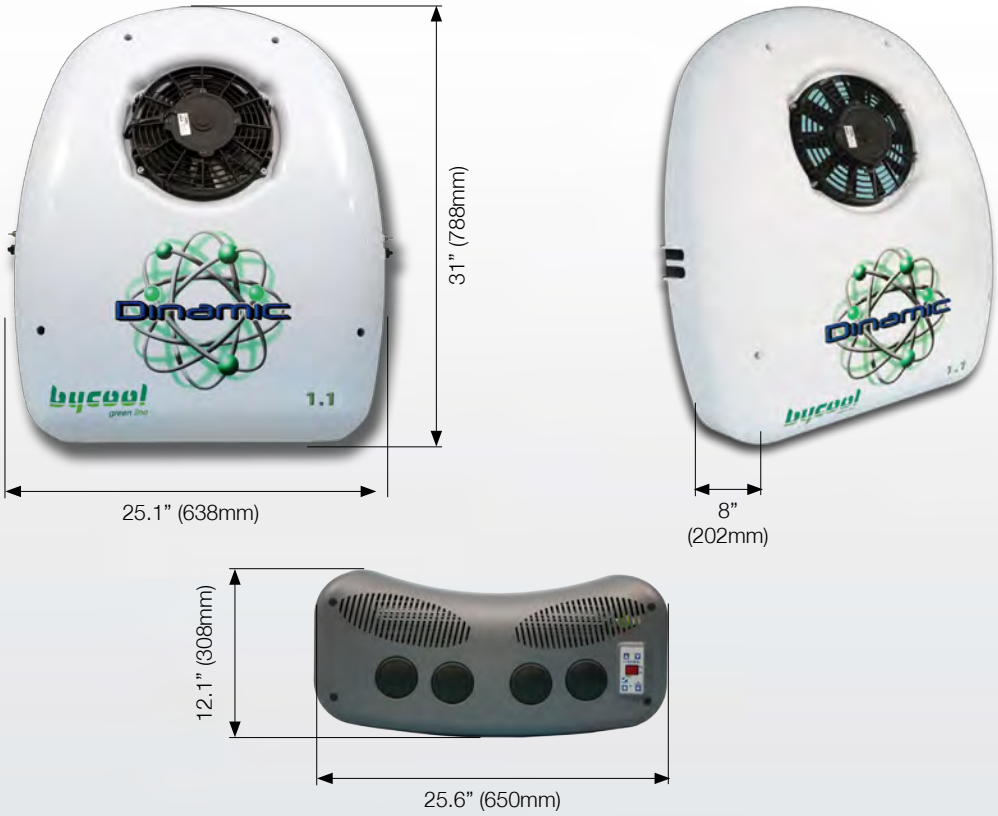

Dinamic 1.1 Order Guide

Part	Part Number	Notes
Unit Part Number	BSP00042AC12 BSP00042AC24	12V 24V
Blower Motor	091148C005 091096C004	12V 24V
Evaporator	091096C003 091096C003	12V 24V
Condenser	091096C011 091096C011	12V 24V
Condenser Fan	091148C002 091096C012	12V 24V
Compressor	091148C004 091096C009	12V 24V

*Installation kit included with system

Advantages

- Operator Comfort
- Best Value
- Very durable structure
- Virtually maintenance free

Remote Control

Bergstrom
STANDARD PRODUCTS

2390 Blackhawk Rd.
PO Box 6007
Rockford, IL 61125
866.507.9773
bergstrominc.com

Warranty

- 2-year limited warranty on parts and systems

© 2016 Bergstrom, Inc.

Features

- Designed for heavy-duty, off-highway applications
- Electrical A/C unit
- Automatic temperature control (in °C & °F)
- Interior control panel
- Pre-charged system with R-134a refrigerant
- Automatic shut-off at low voltage
- Remote control

Battery-Operated

Air Distribution and Control Panel

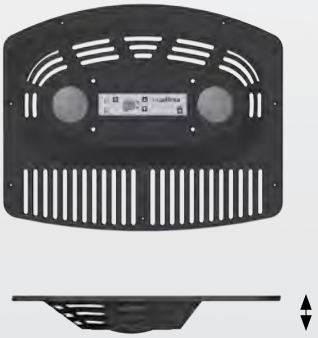

Suggested Applications

Line Drawing

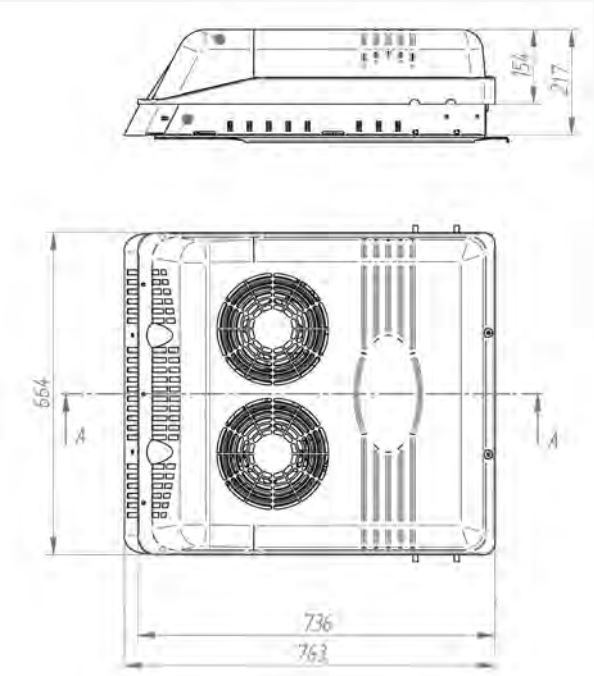

Technical Specifications

Model	Integral Power 12V	Integral Power 24V
Voltage	12V	24V
Power*	6, 824 BTU/hr (2,0 kW)	10,919 BTU/hr (3,2 kW)
Amps**	32 A/h - 65 A/h	20 A/h - 48 A/h
Maximum air flow	410 SCFM (700 m³/hr)	410 SCFM (700 m³/hr)
Dimensions (L x W x H)	30.04in x 26.14in x 8.54in (763mm x 664mm x 217mm)	30.04in x 26.14in x 8.54in (763mm x 664mm x 217mm)
Weight	95.9 lbs. (43,5 kg)	95.9 lbs. (43,5 kg)
Mounting Position	Roof	Roof

(*) System output (BTU/hr) is based on system component-calculated capacities in accordance with JIS standard test conditions: outside temperature 95°F (35°C), return temperature 80°F (27°C).

(**) Test conditions: outside temperature between 86°F (30°C) and 107°F (42°C).

Measurements are listed using the U.S. system with the metric system in parenthesis.

Minimum alternator required: ***12V*** *= 80A/h - 15V /* ***24V*** *= 75 A/h - 28V*

© 2016 Bergstrom, Inc.

Dimensions layout

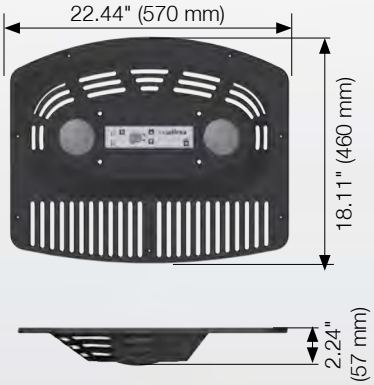

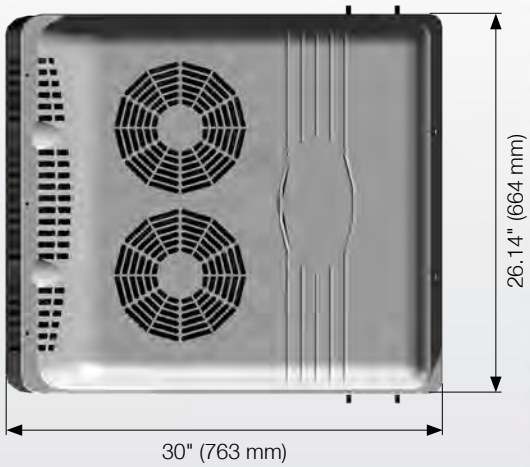

Advantages

- Designed for heavy-duty, off-highway applications
- Operator Comfort
- Adapted to fit a variety of applications
- Very durable structure
- Fully serviceable
- Powerful electric compressor unit

Remote Control

Integral Power ATC Order Guide

Part	Part Number	Notes
Unit Part Number*	BSP00001AC12 BSP00001AC24	12V 24V
Blower Assembly	091186C002 091199C012	12V 24V
Condenser	091186C015 091186C015	12V 24V
Condenser Fan	091099C004 091087C014	12V 24V
Compressor	091186C039 091186C038	12V 24V
Evaporator	091186C006 091186C006	12V 24V
Relay	091243C003 091242C009	12V 24V
Expansion Valve	091199C001 091186C009	12V 24V
Receiver Drier	091186C013 091186C013	12V 24V
Switch	091186C058 091186C058	12V 24V

*Installation kit included with system

Bergstrom STANDARD PRODUCTS
2390 Blackhawk Rd.
PO Box 6007
Rockford, IL 61125
866.507.9773
bergstrominc.com

Warranty

- 2-year limited warranty on parts and systems

© 2016 Bergstrom, Inc.

Features

- Designed for heavy-duty, off-highway applications
- Electrical A/C unit
- Automatic temperature control (in °C & °F)
- Interior control panel
- Pre-charged system with R-134a refrigerant
- Automatic shut-off at low voltage
- Remote control

Air Distribution and Control Panel

Suggested Applications

Battery-Operated

Line Drawing

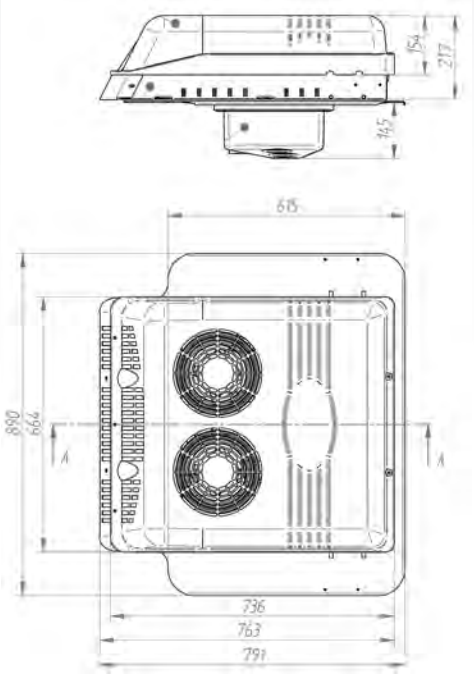

Technical Specifications

Model	Integral Power 12V	Integral Power 24V
Voltage	12V	24V
Power*	6,824 BTU/hr (2,0 kW)	10,919 BTU/hr (3,2 kW)
Amps**	32 A/h - 65 A/h	20 A/h - 48 A/h
Maximum air flow	412 SCFM (700 m³/hr)	412 SCFM (700 m³/hr)
Dimensions (L x W x H)	30.04in x 26.14in x 8.54in (763mm x 664mm x 217mm)	30.04in x 26.14in x 8.54in (763mm x 664mm x 217mm)
Weight	95.9 lbs. (43,5 kg)	95.9 lbs. (43,5 kg)
Mounting Position	Roof	Roof

(*) System output (BTU/hr) is based on system component-calculated capacities in accordance with JIS standard test conditions: outside temperature 95°F (35°C), return temperature 80°F (27°C).

(**) Test conditions: outside temperature between 86°F (30°C) and 107°F (42°C).

Measurements are listed using the U.S. system with the metric system in parenthesis.

Minimum alternator required: ***12V*** *= 80A/h - 15V /* ***24V*** *= 75 A/h - 28V*

© 2016 Bergstrom, Inc.

Dimensions layout

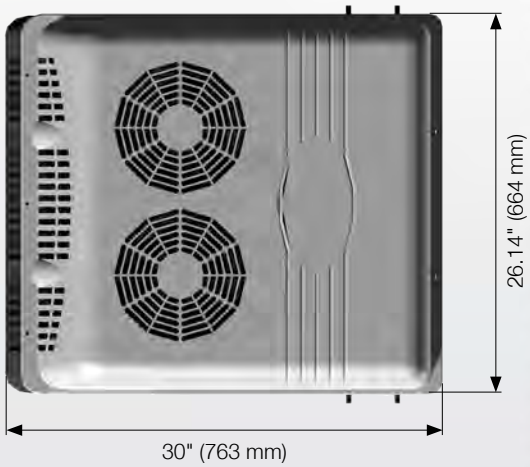

Advantages

- Designed for heavy-duty, off-highway applications
- Operator Comfort
- Adapted to fit a variety of applications
- Very durable structure
- Fully serviceable
- Powerful electric compressor unit

Remote Control

Integral Power ATC Hatch Order Guide

Part	Part Number	Notes
Unit Part Number*	BSP00029AC12 BSP00029AC24	12V ATC 24V ATC
Blower Assembly	091199C002 091186C012	12V ATC 24V ATC
Condenser	091186C015 091186C015	12V ATC 24V ATC
Condenser Fan	091099C004 091087C014	12V ATC 24V ATC
Compressor	091186C039 091186C038	12V ATC 24V ATC
Evaporator	091186C006 091186C006	12V ATC 24V ATC
Relay	091243C003 091242C009	12V ATC 24V ATC
Expansion Valve	091199C001 091186C009	12V ATC 24V ATC
Receiver Drier	091186C013 091186C013	12V ATC 24V ATC
Resistor	112002C001	24V ATC
Filter	091186C024 091186C024	12V ATC 24V ATC
Thermostat	1210020000 1210020000	12V ATC 24V ATC

*Installation kit included with system

Bergstrom STANDARD PRODUCTS
2390 Blackhawk Rd.
PO Box 6007
Rockford, IL 61125
866.507.9773
bergstrominc.com

Warranty

- 2-year limited warranty on parts and systems

© 2016 Bergstrom, Inc.

Features

- Designed for heavy-duty, off-highway applications
- Electrical A/C unit
- Interior control panel
- Pre-charged system with R-134a refrigerant

Air Distribution and Control Panel

Suggested Applications

Line Drawing

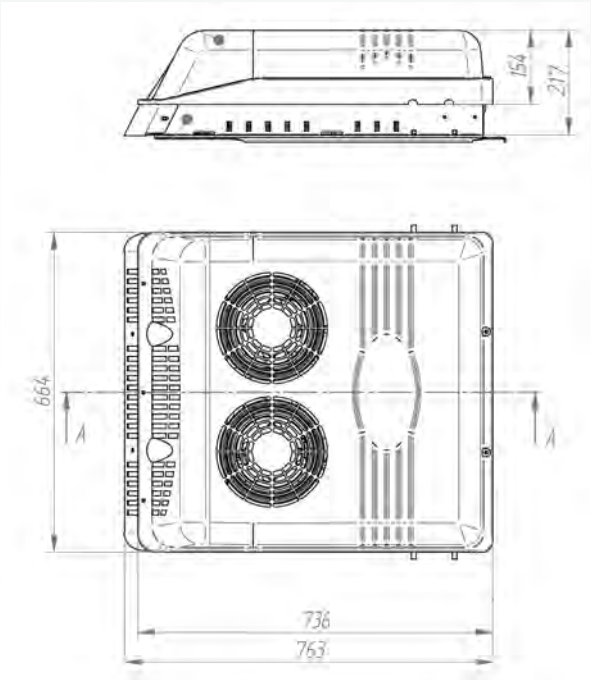

Technical Specifications

Model	Integral Power 12V	Integral Power 24V
Voltage	12V	24V
Power*	6, 824 BTU/hr (2,0 kW)	10,919 BTU/hr (3,2 kW)
Amps**	32 A/h - 65 A/h	20 A/h - 48 A/h
Maximum air flow	410 SCFM (700 m³/hr)	410 SCFM (700 m³/hr)
Dimensions (L x W x H)	30.04in x 26.14in x 8.54in (763mm x 664mm x 217mm)	30.04in x 26.14in x 8.54in (763mm x 664mm x 217mm)
Weight	95.9 lbs. (43,5 kg)	95.9 lbs. (43,5 kg)
Mounting Position	Roof	Roof

(*) System output (BTU/hr) is based on system component-calculated capacities in accordance with JIS standard test conditions: outside temperature 95°F (35°C), return temperature 80°F (27°C).

(**) Test conditions: outside temperature between 86°F (30°C) and 107°F (42°C).

Measurements are listed using the U.S. system with the metric system in parenthesis.

Minimum alternator required: ***12V*** *= 80A/h - 15V /* ***24V*** *= 75 A/h - 28V*

© 2016 Bergstrom, Inc.

Dimensions layout

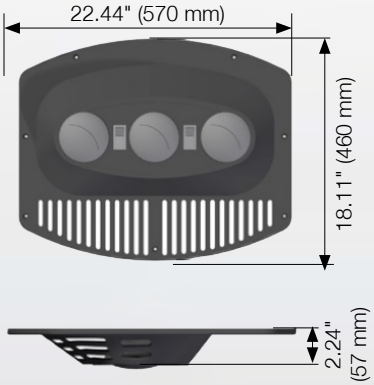

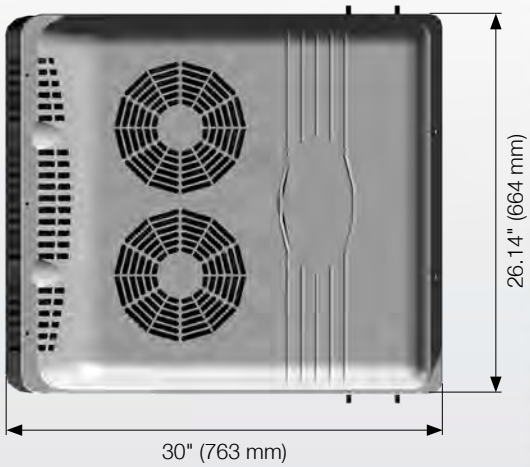

Integral Power Manual Order Guide

Part	Part Number	Notes
Unit Part Number*	BSP00028AC12 BSP00028AC24	12V Manual 24V Manual
Blower Assembly	091199C002 091186C012	12V Manual 24V Manual
Condenser	091186C015 091186C015	12V Manual 24V Manual
Condenser Fan	091099C004 091087C014	12V Manual 24V Manual
Compressor	091186C039 091186C038	12V Manual 24V Manual
Evaporator	091186C006 091186C006	12V Manual 24V Manual
Relay	091243C003 091242C009	12V Manual 24V Manual
Expansion Valve	091199C001 091186C009	12V Manual 24V Manual
Receiver Drier	091186C013 091186C013	12V Manual 24V Manual
Resistor	112002C001	24V Manual
Filter	091186C024 091186C024	12V Manual 24V Manual
Thermostat	1210020000 1210020000	12V Manual 24V Manual

*Installation kit included with system

Advantages

- Designed for heavy-duty, off-highway applications
- Operator Comfort
- Adapted to fit a variety of applications
- Very durable structure
- Fully serviceable
- Powerful electric compressor unit

Bergstrom STANDARD PRODUCTS
2390 Blackhawk Rd.
PO Box 6007
Rockford, IL 61125
866.507.9773
bergstrominc.com

Warranty

- 2-year limited warranty on parts and systems

© 2016 Bergstrom, Inc.

Several combinations to meet your vehicle needs

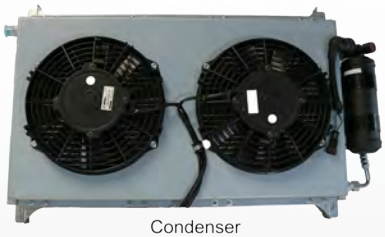

Condenser

Compressor

Horizontal Evaporator

Features

- Manual or automatic function
- Flexibility with multiple installation locations
- Digital thermometer (in °C & °F)*
- Low maintenance costs
- Double battery protection*
- Remote control comes with most packages*

**Not included in Split 3.0 Manual Vertical with Integrated Control*

Air Distribution and Control Panel

Standard control unit

Integrated control for Split 3.0 option

Suggested Applications

Battery-Operated

Technical Specifications, Weights and Dimensions

Maximum air flow - All except one below	394 SCFM (670 m³/hr)
Maximum air flow - Split Off-Raod Horizontal 12V and 24V	471 SCFM (800 m³/hr)
Dimensions - Horizontal Evaporator (L x W x H)	16.25in x 10.27in x 5in (413mm x 261mm x 127mm)
Dimensions - Vertical Evaporator (L x W x H)	18.27in x 6.69in x 20.47in (464mm x 170mm x 520mm)
Dimensions - Single Fan Condenser (L x W x H)	24.4in x 5.27in x 19.48in (620mm x 134mm x 495mm)
Dimensions - Dual Fan Condenser (L x W x H)	24.1in x 4.76in x 16.54in (612mm x 121mm x 420mm)
Dimensions - Compressor (L x W x H)	16.93in x 14.56in x 9.84in (430mm x 370mm x 250mm)
Weight - Horizontal Evaporator	11 lbs. (5 kg)
Weight - Vertical Evaporator	17.2 lbs. (7,8 kg)
Weight - Single Fan Condenser	24.2 lbs (11 kg)
Weight - Dual Fan condenser	14.3 lbs. (6,5 kg)
Weight - Split 2.0 ATC Horizontal Compressor	48.5 lbs. (22 kg)
Weight - All others Compressor	61.7 lbs. (28 kg)
Mounting Position	Universal

Measurements are listed using the U.S. system with the metric system in parenthesis.

Maximum Distances between Components

Condenser unit - Evaporator Unit	11.48 ft (3,50 m)
Evaporator unit - Compressor Unit	9.84 ft (3,00 m)
Compressor unit - Condenser Unit	6.56 ft (2,00 m)

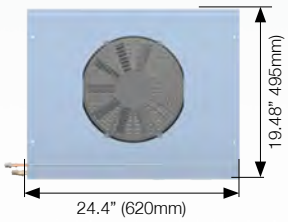

Single Fan Condenser

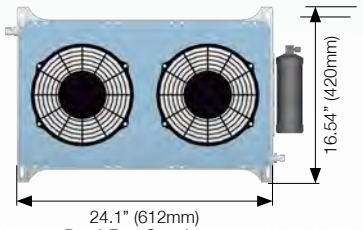

Dual Fan Condenser

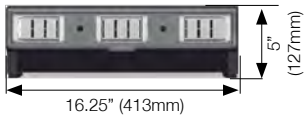

Horizontal Evaporator

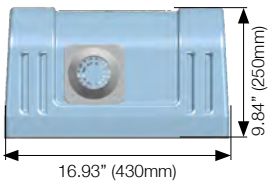

Compressor

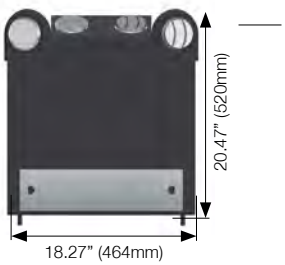

Vertical Evaporator

© 2016 Bergstrom, Inc.

Option	Unit Part Number	Unit Description	Included	Power*	Amps**	Voltage
1	BSP00031AC12	Split Twin 2.0 ATC Horizontal		6,824 BTU/hr (2,0 kW)	42 - 62 A/h	12V
2	BSP00032AC12	Split 2.0 Off-Road ATC Horizontal		6,824 BTU/hr (2,0 kW)	32 - 65 A/h	12V
3	BSP00034AC12	Split 2.0 Off-Road ATC Vertical		6,824 BTU/hr (2,0 kW)	32 - 65 A/h	12V
4	BSP00032AC24	Split 3.0 Off-Road ATC Horizontal		10,919 BTU/hr (3,2 kW)	30 - 45 A/h	24V
5	BSP00034AC24	Split 3.0 Off-Road ATC Vertical		10,919 BTU/hr (3,2 kW)	30 - 45 A/h	24V
6	BSP00033AC24	Split 3.0 Manual Vertical with Integrated Control		10,919 BTU/hr (3,2 kW)	30 - 55 A/h	24V

(*) System output (BTU/hr) is based on system component-calculated capacities. In accordance with JIS standard test conditions: outside temperature 95°F (35°C), return temperature 80°F (27°C).

(**) Test conditions: outside temperature between 86°F (30°C) and 107°F (42°C).

Measurements are listed using the U.S. system with the metric system in parenthesis.

Split 2.0 and 3.0 Order Guide

Part	Part Number	Notes
Blower Assembly	091136C003 0912430003 0912420003 091248C001 091247C002	Split Twin 2.0 Horizontal only Split 2.0 Off-Road Horizontal (12V) Split 3.0 Off-Road Horizontal (24V) Split 2.0 Off-Road Vertical (12V) Split 3.0 Off-Road Vertical (24V)
Condenser	091242C007	All Units
Condenser Fan	091136C028 1750020000 1753340000 091243C001 091272C002	Split Twin 2.0 Horizontal only Split 2.0 Off-Road Horizontal (12V) Split 3.0 Off-Road Horizontal (24V) Split 2.0 Off-Road Vertical (12V) Split 3.0 Off-Road Vertical (24V)
Compressor	091136C014 1108100014 1108100015 091186C039 091186C038	Split Twin 2.0 Horizontal only Split 2.0 Off-Road Horizontal (12V) Split 3.0 Off-Road Horizontal (24V) Split 2.0 Off-Road Vertical (12V) Split 3.0 Off-Road Vertical (24V)
Evaporator	091136C004 0912300037 091247C003	Split Twin 2.0 Horizontal only Off-Road Horizontal Off-Road Vertical
Fan	091136C022	All Units
Expansion Valve	1212210000 091246C002	Off-Road Horizontal Off-Road Vertical
Receiver Drier	1741030000 091242C015	Off-Road Horizontal Off-Road Vertical
Relay	1749010000 1749310000 091243C003 091242C009	Split 2.0 Off-Road Horizontal (12V) Split 3.0 Off-Road Horizontal (24V) Split 2.0 Off-Road Vertical (12V) Split 3.0 Off-Road Vertical (24V)
Pressure Switch	1211670000 091186C010	Off-Road Horizontal Off-Road Vertical
Switch	1265500000 091186C058	Off-Road Horizontal Off-Road Vertical
Remote Control	091087C121	All Units

Remote Control

Bergstrom
STANDARD PRODUCTS
2390 Blackhawk Rd.
PO Box 6007
Rockford, IL 61125
800.499.6849
bergstrominc.com

Warranty

- 2-year limited warranty on parts and systems

Rooftop Systems

FARAD 35

HD-1000 A/C 37

HD-1000 HVAC 39

KA-300 41

KA-2000 43

KA-3000 45

© 2016 Bergstrom, Inc.

Features

- Rugged steel base and molded cover offer superior construction
- Designed to withstand and perform in the most punishing environments
- Industry leading performance with 30,000 BTU/hr cooling capacity
- Option to have pipes as a side exit

Air Distribution and Control Panel

Suggested Applications

Line Drawing

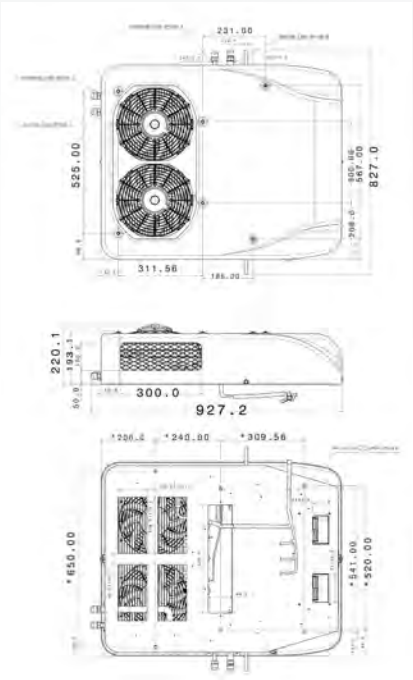

Technical Specifications

Model	Farad 12V
Voltage	12V
Power	30,027 BTU/hr (8,8 kW)
Amps	20 A/h
Maximum air flow	294 SCFM (500 m^3/hr)
Dimensions (L x W x H)	36.50in x 32.56in x 8.67in (927.2mm x 827mm x 220.1mm)
Weight	77 lbs. (34,9 kg)
Mounting Position	Roof

Measurements are listed using the U.S. system with the metric system in parenthesis.

© 2016 Bergstrom, Inc.

Dimensions layout

Farad Order Guide

Part	Part Number	Notes
Unit Part Number	BSP00044AC12	12V 24V
Blower Motor		12V 24V
Resistor		12V 24V
Thermostat		12V 24V
Evaporator		12V 24V
Fan Switch		12V 24V
Expansion Valve		12V 24V
Switch (High, Low)		12V 24V
Receiver Drier		12V 24V
Condenser		12V 24V

Advantages

- Operator Comfort
- Perfect match for your vehicle
- Best Value
- Very durable structure
- Virtually maintenance free
- Powerful electric compressor unit

Bergstrom STANDARD PRODUCTS

2390 Blackhawk Rd.
PO Box 6007
Rockford, IL 61125
866.507.9773
bergstrominc.com

Warranty

- 2-year limited warranty on parts and systems

© 2016 Bergstrom, Inc.

Features

- Heavy-duty steel construction
- Durable double wheel blower
- Variable speed blower switch
- Adjustable thermostat and water valve controls
- Headliner control panel with integrated light
- Integrated receiver drier and single fan condenser

Available with a black hardware kit, page 115

Air Distribution and Control Panel

Suggested Applications

Line Drawing

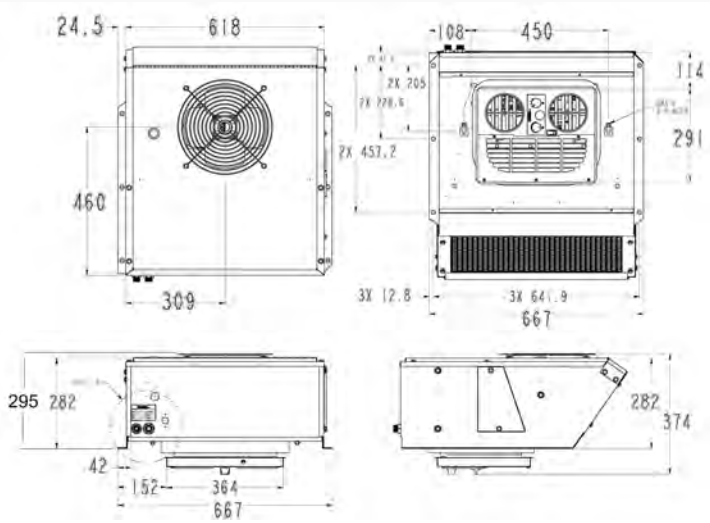

Technical Specifications

Model	HD-1000 12V	HD-1000 24V
Voltage	12V	24V
Power	25,932 BTU/hr (7,6 kW)	25,932 BTU/hr (7,6 kW)
Amps	32 A/h	16 A/h
Maximum air flow	HVAC Blower: 315 SCFM (1,275 m^3/hr) Fan: 750 SCFM (1,275 m^3/hr)	HVAC Blower: 315 SCFM (1,275 m^3/hr) Fan: 750 SCFM (1,275 m^3/hr)
Dimensions (L x W x H)	27.91in x 26.26in x 11.61in (709mm x 667mm x 295mm)	27.91in x 26.26in x 11.61in (709mm x 667mm x 295mm)
Weight	85.1 lbs. (38,6 kg)	85.1 lbs. (38,6 kg)
Mounting Position	Roof	Roof
Refrigeration Inlet	1/2" (#8) tube inverted male o-ring (3/4-16 UNF thread)	1/2" (#8) tube inverted male o-ring (3/4-16 UNF thread)
Refrigeration Outlet	5/8" (#10) tube inverted male o-ring (7/8-14 UNF thread)	5/8" (#10) tube inverted male o-ring (7/8-14 UNF thread)

Measurements are listed using the U.S. system with the metric system in parenthesis.

© 2016 Bergstrom, Inc.

Dimensions layout

HD-1000 A/C Order Guide

Part	Part Number	Notes
Unit Part Number*	BSP00009AC12 BSP00009AC24	12V 24V
Blower Assembly	1099097 1075048	12V 24V
Resistor	2075006 2075008	12V 24V
Condenser	1575027 1575027	12V 24V
Thermostat	2399004 2399004	12V 24V
Evaporator	1675017 1675017	12V 24V
Expansion Valve	1875004 1875004	12V 24V
Receiver Drier	1999214 1999214	12V 24V
Switch	High: 2275009, Low: 2275010 High: 2275009, Low: 2275010	12V 24V
Recirculation Filter Kit	3175006 3175006	12V 24V
R-134a Hose kits with service valves, R-134a access ports	3475002 3475003	18 ft. 24 ft.
R-134a Hose kits without access ports	3475004 3475005	18 ft. 24 ft.

*Installation kit included with system
Crimper kit is required. Bergstrom also offers a crimper kit (part number 2610005).

Advantages

- Operator Comfort
- Perfect match for your vehicle
- Versatile mount to roof
- Durable structure
- Heavy-duty applications

Black Hardware Kit	Part Number
Guard Fan	1000335550
M6 Hex Head 25mm Screws	1000898591
M6 Hex Head 16mm Screws	1000898585

Bergstrom STANDARD PRODUCTS
2390 Blackhawk Rd.
PO Box 6007
Rockford, IL 61125
866.507.9773
bergstrominc.com

Warranty

- 2-year limited warranty on parts and systems

© 2016 Bergstrom, Inc.

Features

- Heavy-duty steel construction
- Durable double wheel blower
- Variable speed blower switch
- Adjustable thermostat and water valve controls
- Headliner control panel with integrated light
- Integrated receiver drier and single fan condenser

Available with a black hardware kit, page 115

Air Distribution and Control Panel

Suggested Applications

Line Drawing

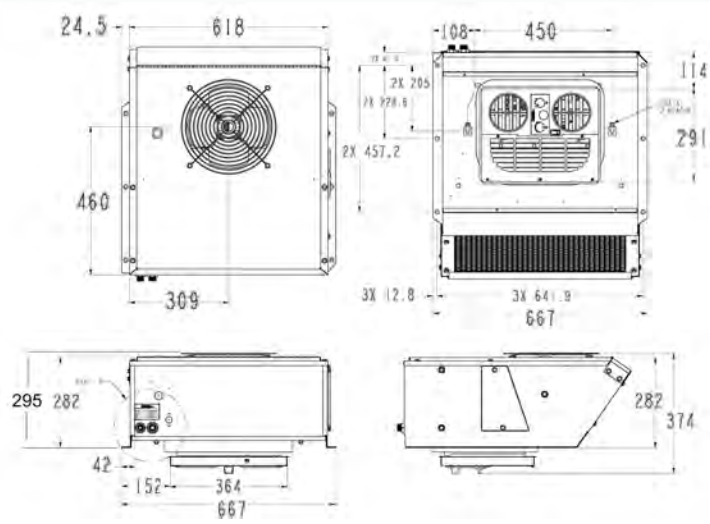

Technical Specifications

Model	HD-1000 12V	HD-1000 24V
Voltage	12V	24V
Power	Cold: 25,932 BTU/hr (7,6 kW) Hot: 34,120 BTU/hr (10,0 kW)	Cold: 25,932 BTU/hr (7,6 kW) Hot: 34,120 BTU/hr (10,0 kW)
Amps	32 A/h	16 A/h
Maximum air flow	315 SCFM (535 m^3/hr)	4315 SCFM (535 m^3/hr)
Dimensions (L x W x H)	27.91in x 26.26in x 11.61in (709mm x 667mm x 295mm)	27.91in x 26.26in x 11.61in (709mm x 667mm x 295mm)
Weight	88 lbs. (40,0 kg)	88 lbs. (40,0 kg)
Mounting Position	Roof	Roof
Refrigeration Inlet	1/2" (#8) tube inverted male o-ring (3/4-16 UNF thread)	1/2" (#8) tube inverted male o-ring (3/4-16 UNF thread)
Refrigeration Outlet	5/8" (#10) tube inverted male o-ring (7/8-14 UNF thread)	5/8" (#10) tube inverted male o-ring (7/8-14 UNF thread)

Measurements are listed using the U.S. system with the metric system in parenthesis.

© 2016 Bergstrom, Inc.

Dimensions layout

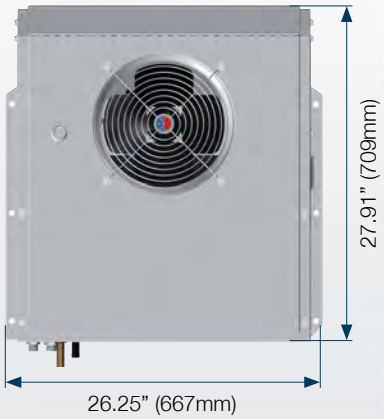

Advantages

- Operator Comfort
- Perfect match for your vehicle
- Versatile mount to roof or side
- Durable structure
- Heavy-duty applications
- Available with a black hardware kit

Black Hardware Kit	Part Number
Guard Fan	1000335550
M6 Hex Head 25mm Screws	1000898591
M6 Hex Head 16mm Screws	1000898585

HD-1000 HVAC Order Guide

Part	Part Number	Notes
Unit Part Number*	BSP00006HVAC12 BSP00006HVAC24	12V 24V
Blower Assembly	1099097 1075048	12V 24V
Resistor	2075006 2075008	12V 24V
Condenser	1575008 1575008	12V 24V
Thermostat	2399004 2399004	12V 24V
Evaporator/Heater Coil	1675016 1675016	12V 24V
Water Valve	2475002 2475002	12V 24V
Expansion Valve	1875004 1875004	12V 24V
Receiver Drier	1975002 1975002	12V 24V
Switch	High: 2275009, Low: 2275010 High: 2275009, Low: 2275010	12V 24V
Recirculation Filter Kit	3175006 3175006	12V 24V
R-134a Hose Kits with service valves, R-134a access ports	3475002 3475003	18 ft. 24 ft.
R-134a Hose Kits without access ports	3475004 3475005	18 ft. 24 ft.

*Installation kit included with system
Crimper Kit 2610005 is required

Bergstrom STANDARD PRODUCTS
2390 Blackhawk Rd.
PO Box 6007
Rockford, IL 61125
866.507.9773
bergstrominc.com

Warranty

- 2-year limited warranty on parts and systems

© 2016 Bergstrom, Inc.

Features

- Heavy-duty steel base construction
- Durable double wheel plastic blower
- Headliner control panel with integrated light
- Adjustable thermostat control
- Variable speed blower switch
- Integrated receiver drier and single fan condenser

Air Distribution and Control Panel

Suggested Applications

Line Drawing

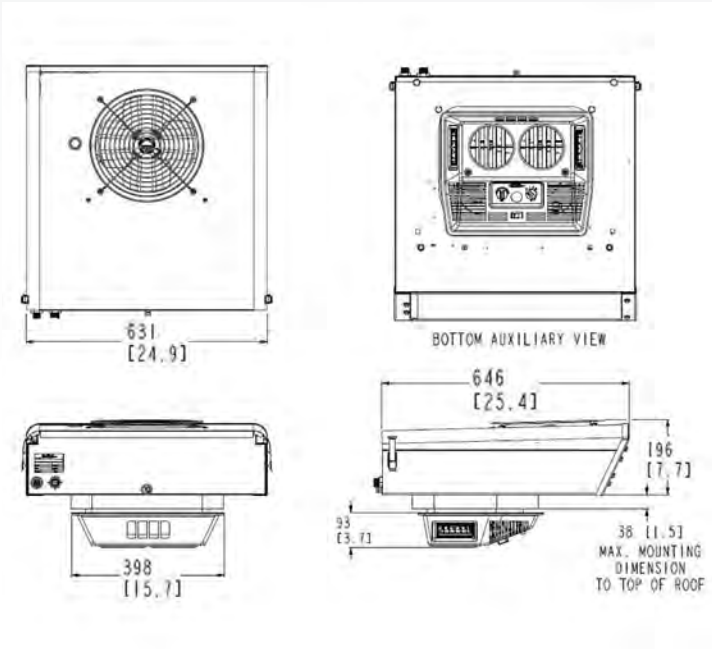

Technical Specifications

Model	KA-300 12V	KA-300 24V
Voltage	12V	24V
Power	18,900 BTU/hr (5,5 kW)	18,900 BTU/hr (5,5 kW)
Amps	26 A/h	13 A/h
Maximum air flow	245 SCFM (416 m^3/hr)	245 SCFM (416 m^3/hr)
Dimensions (L x W x H)	25.39in x 24.84in x 7.72in (645mm x 631mm x 196mm)	25.39in x 24.84in x 7.72in (645mm x 631mm x 196mm)
Weight	74 lbs. (33.6 kg)	74 lbs. (33.6 kg)
Mounting Position	Roof	Roof
Refrigeration Inlet	1/2" (#8) tube inverted male o-ring (3/4-16 UNF thread)	1/2" (#8) tube inverted male o-ring (3/4-16 UNF thread)
Refrigeration Outlet	5/8" (#10) tube inverted male o-ring (7/8-14 UNF thread)	5/8" (#10) tube inverted male o-ring (7/8-14 UNF thread)

Measurements are listed using the U.S. system with the metric system in parenthesis.

© 2016 Bergstrom, Inc.

Dimensions layout

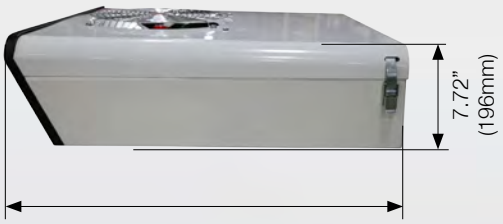

Advantages

- Operator Comfort
- Perfect match for your vehicle
- Best Value
- Very durable structure

Black Hardware Kit	Part Number
Guard Fan	1000335550
M6 Hex Head 25mm Screws	1000898591
M6 Hex Head 16mm Screws	1000898585
Latch, Black	1000929194

KA-300 Order Guide

Part	Part Number	Notes
Unit Part Number*	BSP00039AC12 BSP00039AC24	12V 24V
Blower Motor	1075044 1075046	12V 24V
Resistor	2175003 2175003	12V 24V
Thermostat	2399004 2399004	12V 24V
Evaporator	1675006 1675006	12V 24V
Fan Switch	2175003 2175003	12V 24V
Expansion Valve	1899035 1899035	12V 24V
Switch (High, Low)	2275005, 2275012 2275005, 2275012	12V 24V
Receiver Drier	1000310813 1000310813	12V 24V
Condenser	1575009 1575009	12V 24V
R-134a Hose Kits	3475004 3475005	18 ft. 24 ft.

*Installation kit included with system

Bergstrom STANDARD PRODUCTS
2390 Blackhawk Rd.
PO Box 6007
Rockford, IL 61125
866.507.9773
bergstrominc.com

Warranty

- 2-year limited warranty on parts and systems

© 2016 Bergstrom, Inc.

Features

- Heavy-duty steel construction with plastic cover
- Durable double wheel blower
- 3-speed blower switch
- Adjustable thermostat switch
- Integrated headliner control panel
- Integrated receiver drier and dual fan condenser

Air Distribution and Control Panel

Suggested Applications

Line Drawing

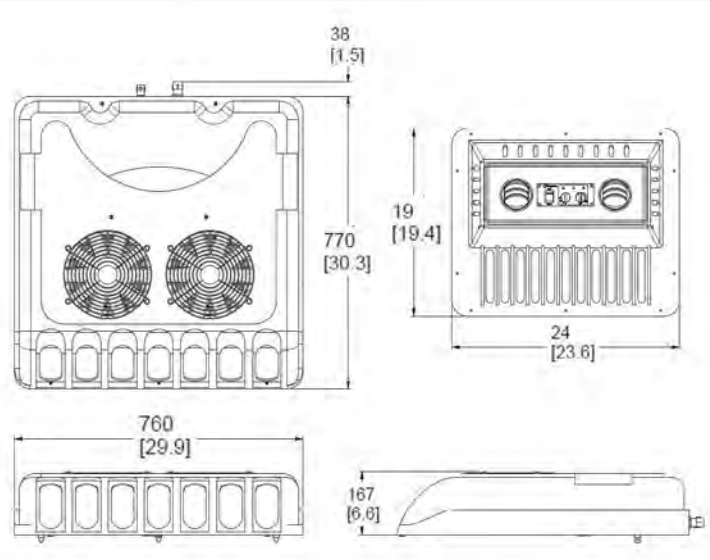

Technical Specifications

Model	KA-2000 12V	KA-2000 24V
Voltage	12V	24V
Power	20,130 BTU/hr (5,9 kW)	20,130 BTU/hr (5,9 kW)
Amps	26 A/h	18 A/h
Maximum air flow	240 SCFM (416 m^3/hr)	240 SCFM (416 m^3/hr)
Dimensions (L x W x H)	30.32in x 29.92in x 6.57in (770mm x 760mm x 167mm)	30.32in x 29.92in x 6.57in (770mm x 760mm x 167mm)
Weight	71 lbs. (32,2 kg)	71 lbs. (32,2 kg)
Mounting Position	Roof	Roof
Refrigeration Inlet	1/2" (#8) tube inverted male o-ring (3/4-16 UNF thread)	1/2" (#8) tube inverted male o-ring (3/4-16 UNF thread)
Refrigeration Outlet	5/8" (#10) tube inverted male o-ring (7/8-14 UNF thread)	5/8" (#10) tube inverted male o-ring (7/8-14 UNF thread)

Measurements are listed using the U.S. system with the metric system in parenthesis.

© 2016 Bergstrom, Inc.

Dimensions layout

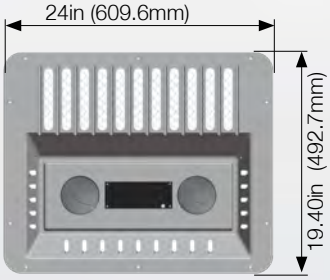

KA-2000 Order Guide

Part	Part Number	Notes
Unit Part Number*	BSP00012AC12 BSP00012AC24	12V 24V
Blower Assembly	1099107 1099108	12V 24V
Axial Fan	1099105 1099106	12V 24V
Condenser	1599103 1599103	12V 24V
Thermostat	2399024 2399024	12V 24V
Evaporator	1699007 1699007	12V 24V
Expansion Valve	1899033 1899033	12V 24V
Receiver Drier	1999209 1999209	12V 24V
R-134a Hose kits with service valves, R-134a access ports	3475002 3475003	18 ft. 24 ft.
R-134a Hose kits without access ports	3475004 3475005	18 ft. 24 ft.

*Installation kit included with system

Advantages

- Operator Comfort
- Perfect match for your vehicle
- Best value in price & efficiency
- Very durable structure
- Virtually maintenance free
- Low-profile

Bergstrom STANDARD PRODUCTS
2390 Blackhawk Rd.
PO Box 6007
Rockford, IL 61125
866.507.9773
bergstrominc.com

Warranty

- 2-year limited warranty on parts and systems

© 2016 Bergstrom, Inc.

Condenser

Evaporator

Features

- Low-profile rooftop mount condenser
- Headliner mount A/C
- Heavy-duty steel base construction with plastic cover
- Durable construction
- Integrated receiver drier
- (2) Double wheel blowers

Air Distribution Panel

Suggested Applications

Line Drawing

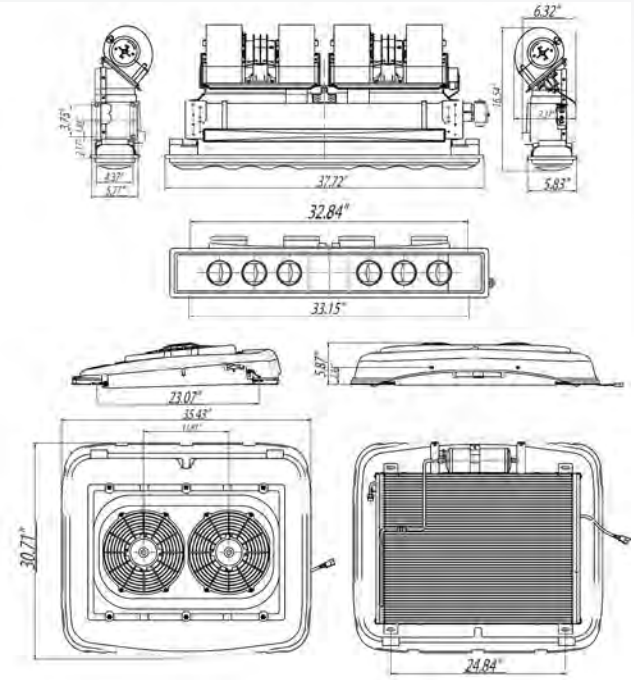

Technical Specifications

Model	KA-3000 12V
Voltage	12V
Power	Evaporator: 23,332 BTU/hr (9,6 kw) Condenser: 35,860 BTU/hr (10,5 kW)
Amps	Evaporator: 11 A/h @27.6v - 22 A/h @ 13.8v Condenser: 12 A/h @ 12v
Maximum air flow	Evaporator: 437 SCFM (742 m^3/hr) Condenser: 875 SCFM (1,486 m^3/hr)
Evaporator Dimensions (L x W x H)	37.72in x 16.54in x 7.37in (958mm x 420mm x 187mm)
Condenser Dimensions (L x W x H)	30.7in x 35in x 6.06in (779mm x 889mm x 154mm)
Weight	Evaporator: 41 lbs. (18,6 kg) Condenser: 47 lbs. (21,3 kg)
Mounting Position	Evaporator: Headliner Condenser: Rooftop

Measurements are listed using the U.S. system with the metric system in parenthesis.

© 2016 Bergstrom, Inc.

Dimensions layout

KA-3000 Order Guide

Part	Part Number	Notes
Unit Part Number	BSP00015AC12	12V
Blower Motor	1099111	12V
Condenser	1599104	12V
Thermostat	2399025	12V
Evaporator	1699008	12V
Axial Fan	1099109	12V
Fan Switch	2199005	12V
Expansion Valve	1899034	12V
Trinary Switch	2299103	12V
Receiver Drier	1999210	12V

Advantages

- Operator Comfort
- Perfect match for your vehicle
- Very durable structure

Bergstrom STANDARD PRODUCTS
2390 Blackhawk Rd.
PO Box 6007
Rockford, IL 61125
866.507.9773
bergstrominc.com

Warranty

- 2-year limited warranty on parts and systems

© 2016 Bergstrom, Inc.

Headliner Systems

KA-400 SLIMLINE. 49

KK-400 SLIMLINE. 51

KA-500 HARDHAT 53

KA-7100 55

KA-7300 57

KELVIN A/C. 59

KELVIN HVAC. 61

PASCAL A/C 63

© 2016 Bergstrom, Inc.

Features

- Heavy-duty steel construction
- Low profile headliner mount A/C
- Durable double wheel blower
- 3-speed blower switch
- Adjustable thermostat control
- Easy access refrigerant hose connections
- (5) Directional shut-off louvers
- Optional fresh air filter package

Air Distribution and Control Panel

Suggested Applications

Line Drawing

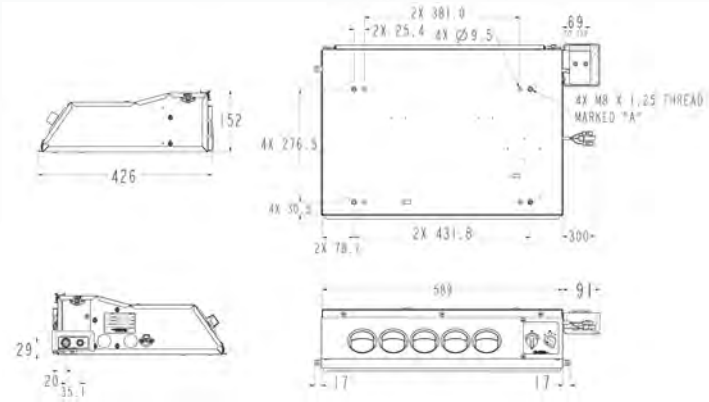

Technical Specifications

Model	KA-400 12V	KA-400 24V
Voltage	12V	24V
Power	21,838 BTU/hr (6,4 kW)	21,838 BTU/hr (6,4 kW)
Amps	10 A/h	5 A/h
Maximum air flow	280 SCFM (425 m³/hr)	280 SCFM (425 m³/hr)
Dimensions (L x W x H)	23.19in x 16.77in x 5.98in (589mm x 426mm x 152mm)	23.19in x 16.77in x 5.98in (589mm x 426mm x 152mm)
Weight	26 lbs. (11,8 kg)	26 lbs. (11,8 kg)
Mounting Position	Headliner	Headliner

Measurements are listed using the U.S. system with the metric system in parenthesis.

Recommended Remote Condenser: KC-500 (page 89)

© 2016 Bergstrom, Inc.

Dimensions layout

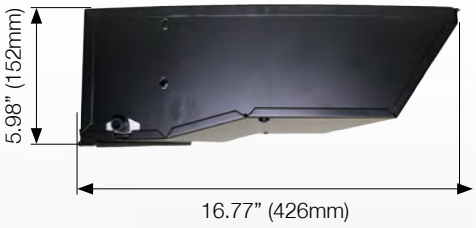

KA-400 Slimline Order Guide

Part	Part Number	Notes
Unit Part Number	BSP00007AC12 BSP00007AC24	12V 24V
Installation Kit*	3475068 3475068	12V 24V
Blower Assembly	1075056 1075057	12V 24V
Resistor	2075006 2075008	12V 24V
Fan Switch	2199005 2199005	12V 24V
Filter	3475017 3475017	12V 24V
Evaporator	1675015 B400130	12V 24V
Expansion Valve	1899035 1899035	12V 24V
Thermostat	2375001 2375001	12V 24V

*Must purchase installation kit with the unit

Advantages

- Operator Comfort
- Perfect match for your vehicle
- Best Value
- Very durable structure
- Virtually maintenance free

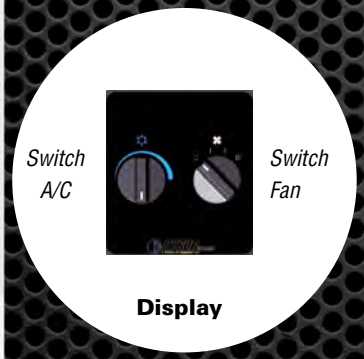

Bergstrom
STANDARD PRODUCTS
2390 Blackhawk Rd.
PO Box 6007
Rockford, IL 61125
866.507.9773
bergstrominc.com

Warranty

- 2-year limited warranty on parts and systems

© 2016 Bergstrom, Inc.

Features

- Heavy-duty steel construction
- Low profile headliner mount A/C
- Durable double wheel blower
- 3-speed blower switch
- Adjustable thermostat control
- Easy access refrigerant hose connections
- (5) Directional shut-off louvers
- Optional fresh air filter package

Air Distribution and Control Panel

Suggested Applications

Line Drawing

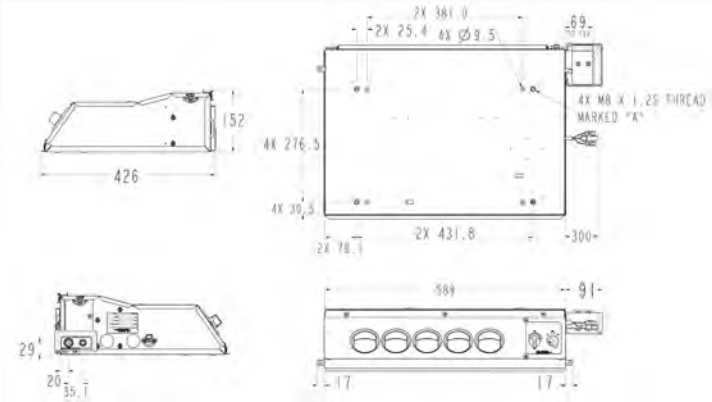

Technical Specifications

Model	KK-400 12V	KK-400 24V
Voltage	12V	24V
Power*	Cold: 21,840 BTU/hr (6,4 kW) Hot: 25,933 BTU/hr (7,6 kW)	Cold: 21,840 BTU/hr (6,4 kW) Hot: 25,933 BTU/hr (7,6 kW)
Amps**	10 A/h	5 A/h
Maximum air flow	280 SCFM (425 m^3/hr)	280 SCFM (425 m^3/hr)
Dimensions (W x H x D)	23.19in x 16.77in x 5.98in (589mm x 426mm x 152mm)	23.19in x 16.77in x 5.98in (589mm x 426mm x 152mm)
Weight	30 lbs. (13,6 kg)	30 lbs. (13,6 kg)
Mounting Position	Headliner	Headliner

Measurements are listed using the U.S. system with the metric system in parenthesis.

Recommended Remote Condenser is KC-500 (page 89)

© 2016 Bergstrom, Inc.

Dimensions layout

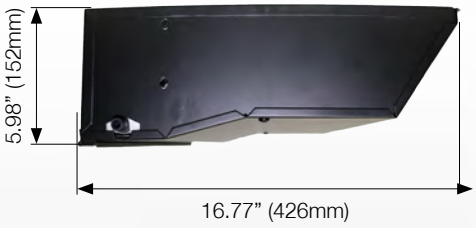

KK-400 Slimline Order Guide

Part	Part Number	Notes
Unit Part Number	BSP00002HVAC12 BSP00002HVAC24	12V 24V
Installation Kit*	3475068 3475068	12V 24V
Blower Assembly	1075056 1075057	12V 24V
Resistor	2075006 2075008	12V 24V
Fan Switch	2199005 2199005	12V 24V
Filter	3475017 3475017	12V 24V
Evaporator	1675015 1675015	12V 24V
Expansion Valve	1899035 1899035	12V 24V
Thermostat	2375001 2375001	12V 24V
Heater Coil	1775013 1775013	12V 24V
Water Valve	2475006 2475006	12V 24V

*Must purchase installation kit with the unit

Advantages

- Operator Comfort
- Perfect match for your vehicle
- Best Value
- Very durable structure
- Virtually maintenance free

Display

Bergstrom STANDARD PRODUCTS
2390 Blackhawk Rd.
PO Box 6007
Rockford, IL 61125
866.507.9773
bergstrominc.com

Warranty

- 2-year limited warranty on parts and systems

© 2016 Bergstrom, Inc.

Features

- Heavy-duty steel base construction
- Lightweight durable high impact cover
- (6) Directional louvers
- 3-speed blower switch
- Adjustable thermostat control
- Easy access refrigerant hose connections
- Easy access to washable recirculating air filter
- Optional fresh air filter package

Air Distribution and Control Panel

Suggested Applications

Line Drawing

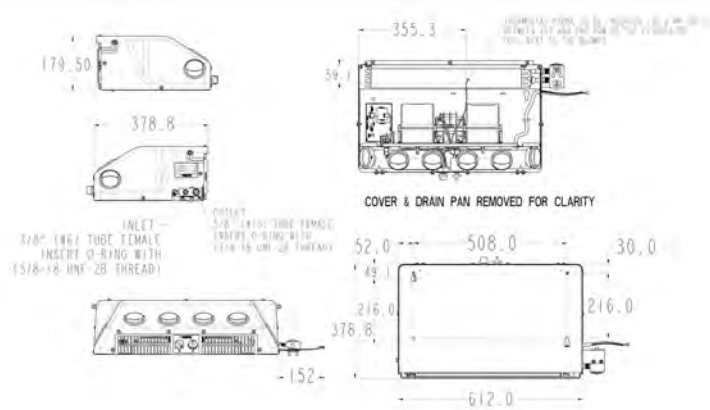

Technical Specifications

Model	KA-500 12V	KA-500 24V
Voltage	12V	24V
Power	29,345 BTU/hr (8,6 kW)	29,345 BTU/hr (8,6 kW)
Amps	13.3 A/h	7.2 A/h
Maximum air flow	305 SCFM (518 m^3/hr)	305 SCFM (518 m^3/hr)
Dimensions (L x W x H)	14.91in x 24.09in x 7.07in (378.8mm x 612mm x 179.5mm)	24.09in x 14.91in x 7.07in (612mm x 378.8mm x 179.5mm)
Weight	35.1 lbs. (15,9 kg)	35.1 lbs. (15,9 kg)
Mounting Position	Headliner	Headliner

Measurements are listed using the U.S. system with the metric system in parenthesis.

Recommended Remote Condensers: KC-110 (page 85), KC-440 (page 87), KC-750 (page 91) or KC-1010 (page 97)

© 2016 Bergstrom, Inc.

Dimensions layout

KA-500 Hardhat Order Guide

Part	Part Number	Notes
Unit Part Number	BSP00035AC12 BSP00035AC24	12V 24V
Installation Kit*	3475067 3475067	12V 24V
Blower Motor	1075044 304979	12V 24V
Resistor	2075006 2075008	12V 24V
Thermostat	2375001 2375001	12V 24V
Evaporator	1675026 1675026	12V 24V
Fan Switch	2199005 2199005	12V 24V
Recirculating Filter	3175011 3175011	12V 24V
Fresh Air Filter	3175002 3175002	12V 24V
Expansion Valve	1899035 1899035	12V 24V

*Must order kit when ordering a unit

Advantages

- Operator Comfort
- Very durable structure
- Low profile headliner mount

Bergstrom STANDARD PRODUCTS

2390 Blackhawk Rd.
PO Box 6007
Rockford, IL 61125
866.507.9773
bergstrominc.com

Warranty

- 2-year limited warranty on parts and systems

© 2016 Bergstrom, Inc.

Features

- Heavy-duty steel construction
- 3-speed double blower package
- Durable plastic cover
- Adjustable thermostat control
- (2) Dual opening large capacity shut-off louvers
- (2) Directional louvers
- Heavy-duty headliner A/C
- Recirculating air filter - easily accessible & washable

Air Distribution Panel

Suggested Applications

Line Drawing

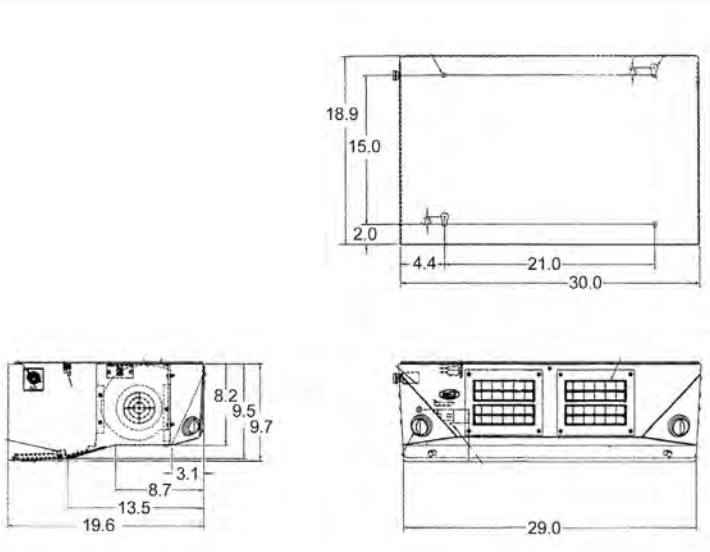

Technical Specifications

Model	KA-7100 12V
Voltage	12V
Power	49,500 BTU/hr (14,5 kW)
Amps	16.2 A/h
Maximum air flow	550 SCFM (935 m³/hr)
Dimensions (L x W x H)	30.0in x 19.6in x 9.7in (762mm x 498mm x 247mm)
Weight	35.1 lbs. (15,9 kg)
Mounting Position	Headliner

Measurements are listed using the U.S. system with the metric system in parenthesis.

Recommended Remote Condenser: KC-800 (page 93)

© 2016 Bergstrom, Inc.

Dimensions layout

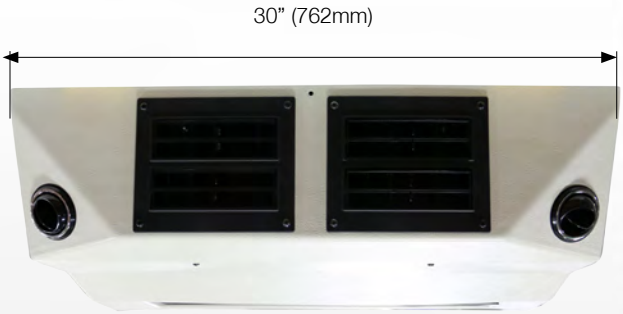

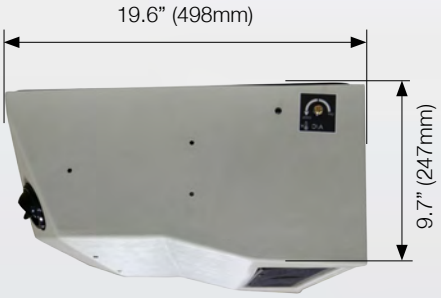

KA-7100 Order Guide

Part	Part Number	Notes
Unit Part Number	BSP00037AC12	12V
Blower Motor	1075018	12V
Resistor	2099006	12V
Thermostat	2375001	12V
Evaporator	1675020	12V
Filter	3475019	12V
Expansion Valve	1817001	12V
Wiring Kit	3475060	
Universal Hose Kit	3475087	

Advantages

- Operator Comfort
- Perfect match for your vehicle
- Best Value
- Very durable structure

Bergstrom STANDARD PRODUCTS

2390 Blackhawk Rd.
PO Box 6007
Rockford, IL 61125
866.507.9773
bergstrominc.com

Warranty

- 2-year limited warranty on parts and systems

© 2016 Bergstrom, Inc.

Features

- Heavy-duty steel construction
- (2) 3-speed double blower package
- Adjustable thermostat control
- (2) Dual opening large capacity shut-off louvers (?)
- (4) Directional louvers
- Heavy-duty headliner A/C
- Recirculating air filter - easily accessible & washable

Air Distribution Panel

Suggested Applications

Line Drawing

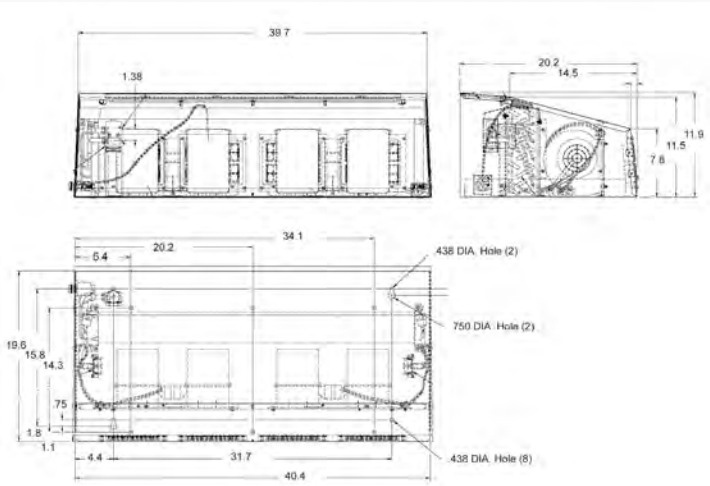

Technical Specifications

Model	KA-7300 12V
Voltage	12V
Power	75,408 BTU/hr (22,1 kW)
Amps	15 A/h - 30 A/h
Maximum air flow	940 SCFM (1597 m^3/hr)
Dimensions (L x W x H)	40.4in x 20.2in x 11.9in (1026.2mm x 513mm x 302.3mm)
Weight	68 lbs. (30,8 kg)
Mounting Position	Headliner

Measurements are listed using the U.S. system with the metric system in parenthesis.

Recommended Remote Condenser: KC-900 (page 95)

© 2016 Bergstrom, Inc.

Dimensions layout

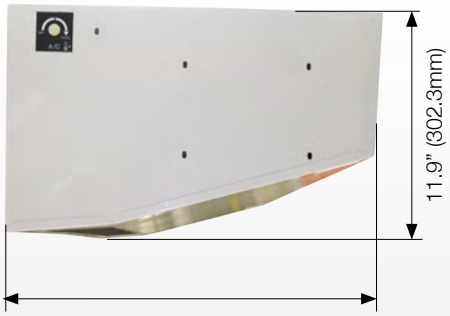

40.4” (1,026.2mm)

KA-7300 Order Guide

Part	Part Number	Notes
Unit Part Number	BSP00038AC12	12V
Blower Motor	1075018	12V
Resistor	2099006	12V
Thermostat	2375001	12V
Evaporator	1675020	12V
Filter	3475020	12V
Expansion Valve	1817001	12V
Wiring Kit	3475060	
Universal Hose Kit	3475087	

Advantages

- Operator Comfort
- Perfect match for your vehicle
- Best Value
- Very durable structure

Bergstrom STANDARD PRODUCTS
2390 Blackhawk Rd.
PO Box 6007
Rockford, IL 61125
866.507.9773
bergstrominc.com

Warranty

- 2-year limited warranty on parts and systems

© 2016 Bergstrom, Inc.

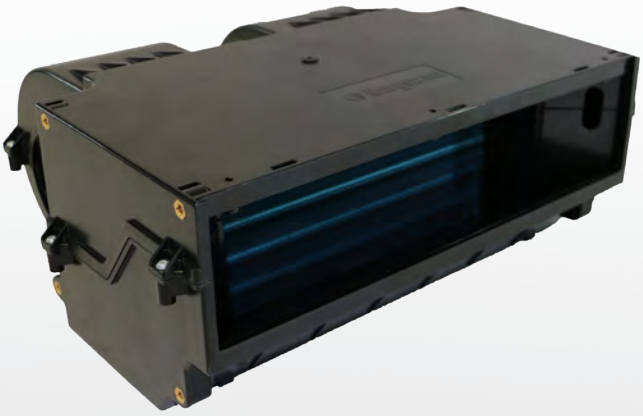

Features

- Shell constructed with durable molded plastic
- Integrated single twin scroll blower
- 4 air outlets (spigot/louver)
- 3 fan speeds

Air Distribution Panel

Spigot

Louver

See other available panel options page 116

Suggested Applications

Line Drawing

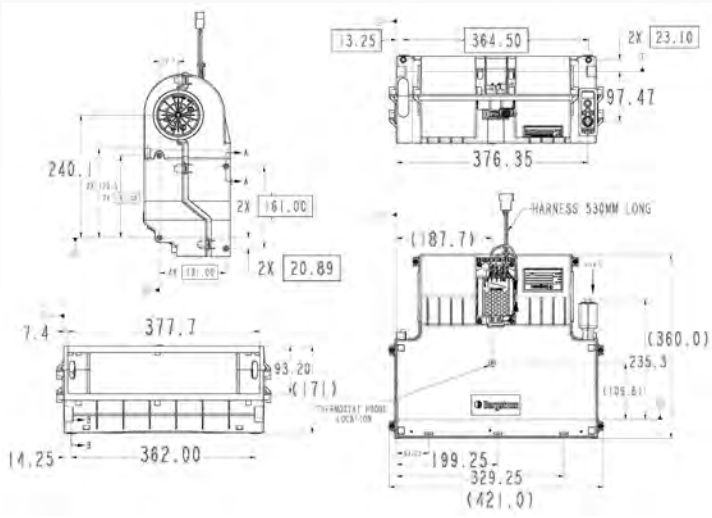

Technical Specifications

Model	Kelvin 12V	Kelvin 24V
Voltage	12V	24V
Power	20,810 BTU/hr (6,1 kW)	20,810 BTU/hr (6,1 kW)
Amps	21.6 A/h	11 A/h
Maximum air flow	460 SCFM (780 m³/hr)	460 SCFM (780 m³/hr)
Dimensions (L x W x H)	14.71in x 16.53in x 6.69in (360mm x 421mm x 170mm)	14.71in x 16.53in x 6.69in (360mm x 421mm x 170mm)
Weight	14.3 lbs. (6,5 kg)	14.3 lbs. (6,5 kg)
Mounting Position	Horizontal (Floor or Headliner)	Horizontal (Floor or Headliner)

(*) System output (BTU/hr) is based on system component-calculated capacities in accordance with ISO1515 standard test conditions: outside temperature 100°F (38°C), humidity 40%.

Measurements are listed using the U.S. system with the metric system in parenthesis.

Recommended Remote Condenser: KC-110 (page 85) or KC-750 24V (page 91)

© 2016 Bergstrom, Inc.

Dimensions layout

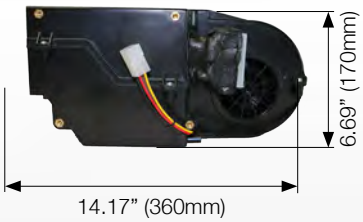

Kelvin A/C Order Guide

Part	Part Number	Notes
Unit Part Number	BSP00026AC12 BSP00026AC24	12V 24V
Blower Motor	1000757353 1000796197	12V 24V
Resistor	2099027 2099027	12V 24V
Evaporator	1000750666 1000750666	12V 24V
Expansion Valve	0990013359 0990013359	12V 24V
Attaching Actuator Screws	1000204696 1000204696	12V 24V
Actuator	1000593041 1000593041	12V 24V
Water Valve	1000651116 1000651116	12V 24V

Advantages

- Operator Comfort
- Perfect match for your vehicle
- Best Value
- Very durable structure
- Virtually maintenance free
- Powerful electric compressor unit

Bergstrom STANDARD PRODUCTS
2390 Blackhawk Rd.
PO Box 6007
Rockford, IL 61125
866.507.9773
bergstrominc.com

Warranty

- 2-year limited warranty on parts and systems

© 2016 Bergstrom, Inc.

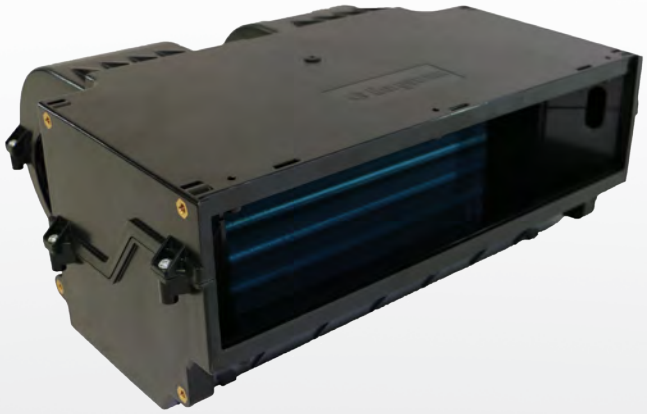

Features

- Shell constructed with durable molded plastic
- Double wheel high performance blower
- 4 air outlets (spigot/louver)
- 4 fan speeds

Air Distribution Panel

Spigot

Louver

See other available panel options page 116.

Suggested Applications

Line Drawing

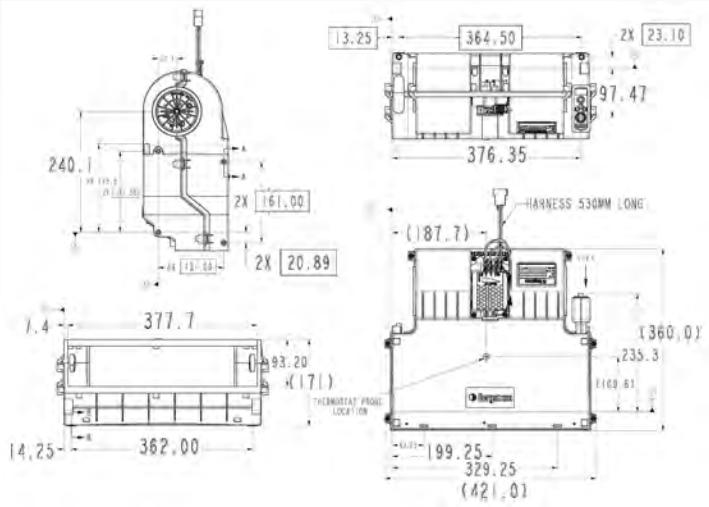

Technical Specifications

Model	Kelvin 12V	Kelvin 24V
Voltage	12V	24V
Power	Cold: 20,810 BTU/hr (6,1 kW) Hot: 32,410 BTU/hr (9,6 kW)	Cold: 20,810 BTU/hr (6,1 kW) Hot: 32,410 BTU/hr (9,6 kW)
Amps	20 A/h	10.5 A/h
Maximum air flow	410 SCFM (650 m^3/hr)	410 SCFM (650 m^3/hr)
Dimensions (W x H x D)	14.71in x 16.53in x 6.69in (360mm x 421mm x 170mm)	14.71in x 16.53in x 6.69in (360mm x 421mm x 170mm)
Weight	13.9 lbs. (6.5 kg)	13.9 lbs. (6.5 kg)
Mounting Position	Horizontal (Floor or Headliner)	Horizontal (Floor or Headliner)

Measurements are listed using the U.S. system with the metric system in parenthesis.

Recommended Remote Condenser: KC-110 (page 85), KC-440 (page 87) or KC-750 24V (page 91)

© 2016 Bergstrom, Inc.

Dimensions layout

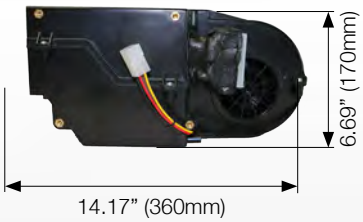

Spigot 2.36” (60mm)

2.05” (52mm)

Louver

2.44” (62mm)

Kelvin HVAC Order Guide

Part	Part Number	Notes
Unit Part Number	BSP00014HVAC12 BSP00014HVAC24	12V 24V
Blower Motor	1000757353 1000796197	12V 24V
Resistor	2099027 2099027	12V 24V
Evaporator	1000750666 1000750666	12V 24V
Heater Coil	1000960129 1000960129	12V 24V
Water Valve		12V 24V
Expansion Valve	0990013359 0990013359	12V 24V

Advantages

- Operator Comfort
- Perfect match for your vehicle
- Best Value
- Very durable structure
- Virtually maintenance free
- Powerful electric compressor unit

Bergstrom STANDARD PRODUCTS
2390 Blackhawk Rd.
PO Box 6007
Rockford, IL 61125
866.507.9773
bergstrominc.com

Warranty

- 2-year limited warranty on parts and systems

© 2016 Bergstrom, Inc.

Features

- Shell constructed with durable molded plastic
- Integrated single twin scroll blowers
- 3 air outlets (spigot/louver)
- 3 fan speeds

Air Distribution Panel

Spigot

Louver

See other available panel options on page 116

Suggested Applications

Line Drawing

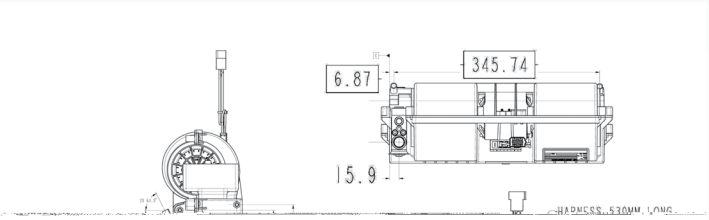

Technical Specifications

Model	Pascal 12V	Pascal 24V
Voltage	12V	24V
Power	13,650 BTU/hr (4,0 kW)	13,650 BTU/hr (4,0 kW)
Amps	7.8 A/h	4.5 A/h
Maximum air flow	265 SCFM (450 m^3/hr)	265 SCFM (450 m^3/hr)
Dimensions (L x W x H)	9.21in x 15.3in x 5.29in (234mm x 388.5mm x 134.3mm)	9.21in x 15.3in x 5.29in (234mm x 388.5mm x 134.3mm)
Weight	8.4 lbs. (3,8 kg)	8.4 lbs. (3,8 kg)
Mounting Position	Horizontal (Floor or Headliner)	Horizontal (Floor or Headliner)
Tube Connection	(2) 5/8" O.D.	(2) 5/8" O.D.

Measurements are listed using the U.S. system with the metric system in parenthesis.

Recommended Remote Condensers: KC-90 (page 83), KC-500 (page 89) or KC-750 24V (page 91)

© 2016 Bergstrom, Inc.

Dimensions layout

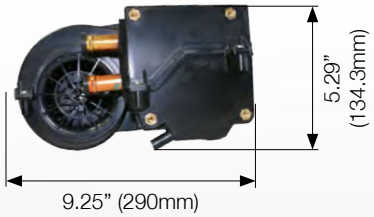

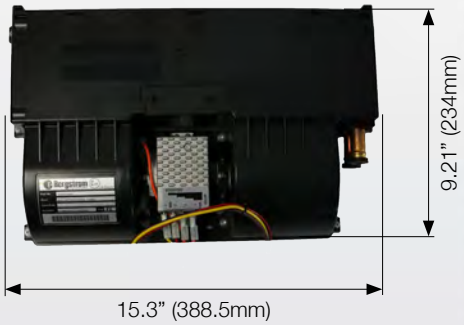

Pascal A/C Order Guide

Part	Part Number	Notes
Unit Part Number	BSP00025AC12 BSP00025AC24	12V 24V
Blower Motor	1000777603 1000783637	12V 24V
Resistor	2099027 2099027	12V 24V
Evaporator	1000763896 1000763896	12V 24V
Expansion Valve	0990013359 0990013359	12V 24V
Attaching actuator screws	1000240696 1000240696	12V 24V
Actuator	1000593041 1000593041	12V 24V
Water Valve	1000651116 1000651116	12V 24V

Advantages

- Operator Comfort
- Perfect match for your vehicle
- Best Value
- Very durable structure
- Virtually maintenance free

Bergstrom STANDARD PRODUCTS
2390 Blackhawk Rd.
PO Box 6007
Rockford, IL 61125
866.507.9773
bergstrominc.com

Warranty

- 2-year limited warranty on parts and systems

© 2016 Bergstrom, Inc.

Backwall Systems

KA-550 SLIMLINE. 67

KK-550 SLIMLINE. 69

KK-600 BACKPACK 71

KA-710 SIDEKICK 73

VERTICAL GRANDE A/C 75

VERTICAL GRANDE HVAC 77

© 2016 Bergstrom, Inc.

Features

- Heavy-duty steel construction
- Durable double wheel blower
- 3-speed blower switch
- Adjustable thermostat and water valve controls
- Easy access refrigerant hose connections
- (3) 3″ Directional top louvers
- (2) 3″ directional front louvers
- Adjustable fresh air | recirculating air door

Air Distribution and Control Panel

Suggested Applications

Line Drawing

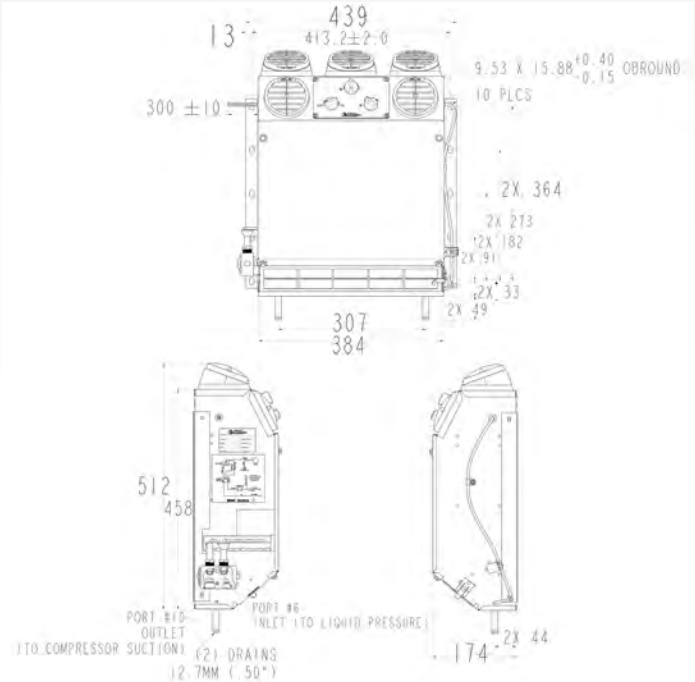

Technical Specifications

Model	KA-550 12V	KA-550 24V
Voltage	12V	24V
Power	19,449 BTU/hr (5,7 kW)	19,449 BTU/hr (5,7 kW)
Amps	12 A/h	7 A/h
Maximum air flow	275 SCFM (467 m^3/hr)	275 SCFM (467 m^3/hr)
Dimensions (W x H x D)	17.28in x 20.16in x 6.85in (439mm x 512mm x 174mm)	17.28in x 20.16in x 6.85in (439mm x 512mm x 174mm)
Weight	34 lbs. (15,4 kg)	34 lbs. (15,4 kg)
Mounting Position	Wall	Wall

Measurements are listed using the U.S. system with the metric system in parenthesis.

Recommended Remote Condensers: KC-90 (page 83), KC-440 (page 87), KC-500 (page 89), KC-750 (page 91), KC-1010 (page 97) or KC-3000 (page 99)

© 2016 Bergstrom, Inc.

Dimensions layout

Advantages

- Operator Comfort
- Perfect match for your vehicle
- Best Value
- Durable structure
- Small profile twall mount A/C

Switch A/C

Switch recirculation *Switch Fan*

KA-550 Slimline Order Guide

Part	Part Number	Notes
Unit Part Number	BSP00008AC12 BSP00008AC24	12V 24V
Installation Kit*	3475069 3475069	12V 24V
Blower Assembly	1075044 1075046	12V 24V
Resistor	2099016 2075008	12V 24V
Filter	3175012 3175012	12V 24V
Evaporator	1675019 1675019	12V 24V
Expansion Valve	1899035 1899035	12V 24V
Fresh Air Filter	3475053 3475053	12V 24V
Recirculating Air Filter	3175012 3175012	12V 24V

*Must include when ordering unit

Bergstrom STANDARD PRODUCTS
2390 Blackhawk Rd.
PO Box 6007
Rockford, IL 61125
866.507.9773
bergstrominc.com

Warranty

- 2-year limited warranty on parts and systems

© 2016 Bergstrom, Inc.

Features

- Heavy-duty steel construction
- Durable double wheel blower
- 3-speed blower switch
- Adjustable thermostat and water valve controls
- Easy access refrigerant hose connections
- (3) 3″ Directional top louvers
- (2) 3″ directional front louvers
- Adjustable fresh air | recirculating air door

Air Distribution and Control Panel

Suggested Applications

Line Drawing

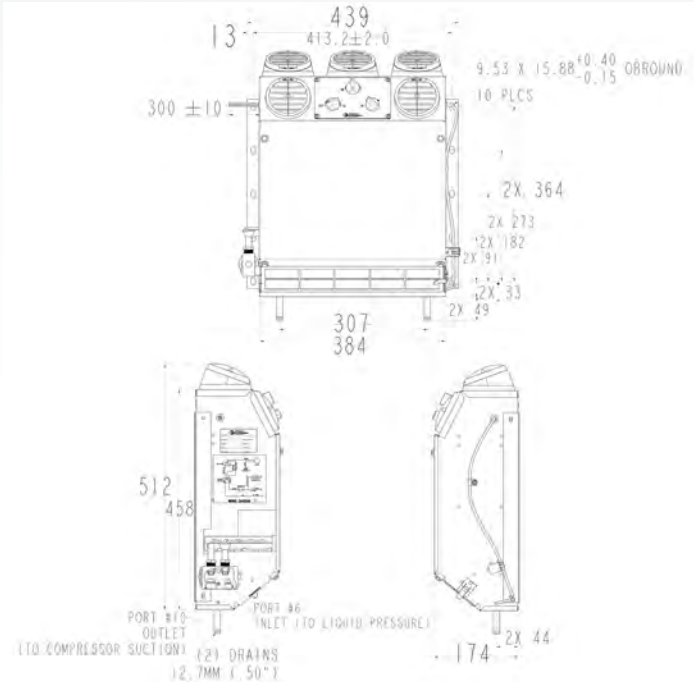

Technical Specifications

Model	KK-550 12V	KK-550 24V
Voltage	12V	24V
Power	Cold: 19,449 BTU/hr (5,7 kW) Hot: 33,500 BTU/hr (9,8 kW)	Cold: 19,449 BTU/hr (5,7 kW) Hot: 33,500 BTU/hr (9,8 kW)
Amps	12 A/h	7 A/h
Maximum air flow	275 SCFM (467 m^3/hr)	275 SCFM (467 m^3/hr)
Dimensions (W x H x D)	17.28in x 6.85in x 20.16in (439mm x 174mm x 512mm)	17.28in x 6.85in x 20.16in (439mm x 174mm x 512mm)
Weight	37.04 lbs. (16,8 kg)	37.04 lbs. (16,8 kg)
Mounting Position	Corner	Corner

Measurements are listed using the U.S. system with the metric system in parenthesis.

Recommended Remote Condensers: KC-90 (page 83), KC-440 (page 87), KC-500 (page 89), KC-750 (page 91), KC-1010 (page 97) or KC-3000 (page 99)

© 2016 Bergstrom, Inc.

Dimensions layout

KK-550 Slimline Order Guide

Part	Part Number	Notes
Unit Part Number	BSP00003HVAC12 BSP00003HVAC24	12V 24V
Blower Assembly	1099097 304979	12V 24V
Resistor	2099016 2075001	12V 24V
Filter	3175004 3175004	12V 24V
Evaporator	1675019 1675019	12V 24V
Expansion Valve	1899035 1899035	12V 24V
Heater Coil	1775013 1775013	12V 24V
Water Valve	2499116 2499116	12V 24V
Fresh Air Filter	3475053 3475053	12V 24V
Recirculating Air Filter	3175012 3175012	12V 24V
Installation Kit	3475069 3475069	12V 24V

Advantages

- Operator Comfort
- Perfect match for your vehicle
- Best Value
- Durable structure
- Small profile wall mount A/C

Switch A/C

Switch recirculation *Switch Fan*

Bergstrom STANDARD PRODUCTS
2390 Blackhawk Rd.
PO Box 6007
Rockford, IL 61125
866.507.9773
bergstrominc.com

Warranty

- 2-year limited warranty on parts and systems

© 2016 Bergstrom, Inc.

Features

- Heavy-duty steel construction
- 3-speed blower switch
- Adjustable thermostat and water valve controls
- Durable double wheel blower
- Easy access refrigerant and heater hose connections
- (3) 3″ directional top louvers
- (4) directional front louvers

Air Distribution and Control Panel

Suggested Applications

Line Drawing

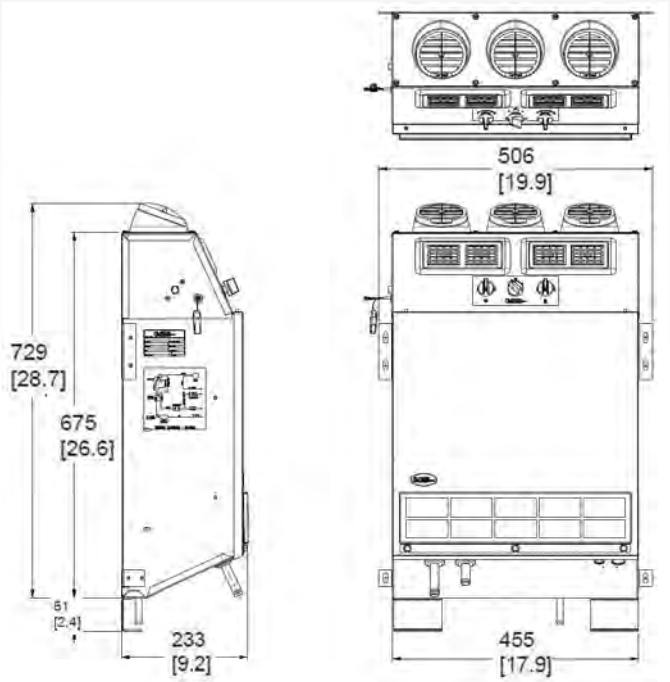

Technical Specifications

Model	KK-600 Backpack 12V	KK-600 Backpack 24V
Voltage	12V	24V
Power	Cold: 33,439 BTU/hr (9,8 kW) Hot: 47,770 BTU/hr (14,0 kW)	Cold: 33,439 BTU/hr (9,8 kW) Hot: 47,770 BTU/hr (14,0 kW)
Amps	12 A/h	6 A/h
Maximum air flow	325 SCFM (552 m^3/hr)	325 SCFM (552 m^3/hr)
Dimensions (W x H x D)	19.9in x 28.7in x 9.2in (506mm x 729mm x 233mm)	19.9in x 28.7in x 9.2in (506mm x 729mm x 233mm)
Weight	70 lbs. (31.8 kg)	70 lbs. (31.8 kg)
Mounting Position	Wall	Wall

Measurements are listed using the U.S. system with the metric system in parenthesis.

Recommended Remote Condenser is KC-110 (page 85) or KC-1010 (page 97)

© 2016 Bergstrom, Inc.

Dimensions layout

KK-600 Backpack Order Guide

Part	Part Number	Notes
Unit Part Number	BSP00016HVAC12 BSP00016HVAC24	12V 24V
Blower Motor	1099087 1075048	12V 24V
Blower Wheel	1199028 1199028	12V 24V
Resistor	2075006 2075008	12V 24V
Thermostat	2399004 2399004	12V 24V
Evaporator	1675010 1675010	12V 24V
Expansion Valve	1899035 1899035	12V 24V
Heater Coil	1775007 1775007	12V 24V
Water Valve		12V 24V
Relay	2475010 2475010	12V 24V

Advantages

- Operator Comfort
- Best Value
- Very durable structure

Bergstrom STANDARD PRODUCTS

2390 Blackhawk Rd.
PO Box 6007
Rockford, IL 61125
866.507.9773
bergstrominc.com

Warranty

- 2-year limited warranty on parts and systems

© 2016 Bergstrom, Inc.

Features

- Heavy-duty steel base construction
- Durable double wheel plastic blower
- 3-speed blower switch
- Adjustable thermostat control
- (4) 3" adjustable front/side louvers
- Variable mounting

Suggested Applications

Air Distribution and Control Panel

Line Drawing

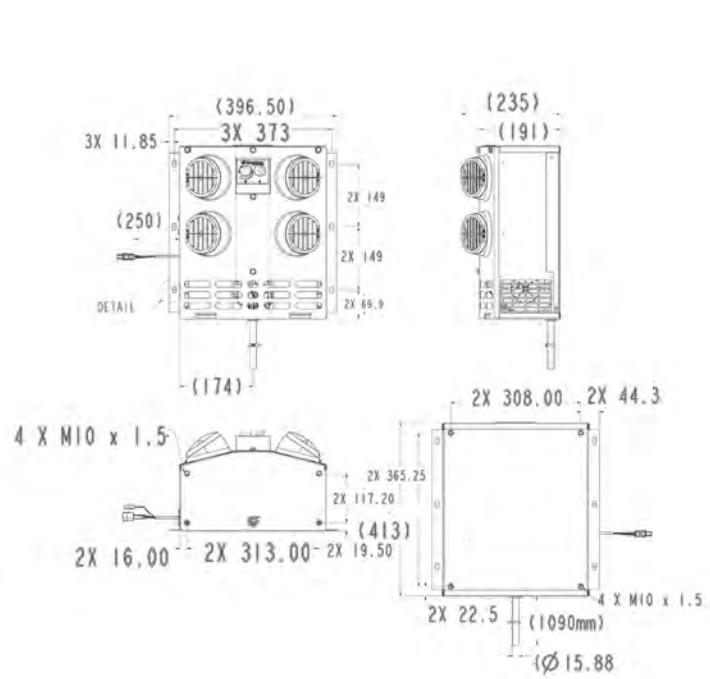

Technical Specifications

Model	KA-710 Sidekick 12V	KA-710 Sidekick 24V
Voltage	12V	24V
Power	24,500 BTU/hr (7,2 kW)	24,500 BTU/hr (7,2 kW)
Amps	14 A/h	7 A/h
Maximum air flow	285 SCFM (484 m^3/hr)	285 SCFM (484 m^3/hr)
Dimensions (W x H x D)	15.6in x 15.61in x 9.25in (396.5mm x 396.5mm x 235mm)	15.6in x 15.61in x 9.25in (396.5mm x 396.5mm x 235mm)
Weight	29 lbs. (13,2 kg)	29 lbs. (13,2 kg)
Mounting Position	Wall	Wall

Measurements are listed using the U.S. system with the metric system in parenthesis.

Recommended Remote Condenser: KC-110 (page 85), KC-500 (page 89) or KC-1010 (page 97)

© 2016 Bergstrom, Inc.

Dimensions layout

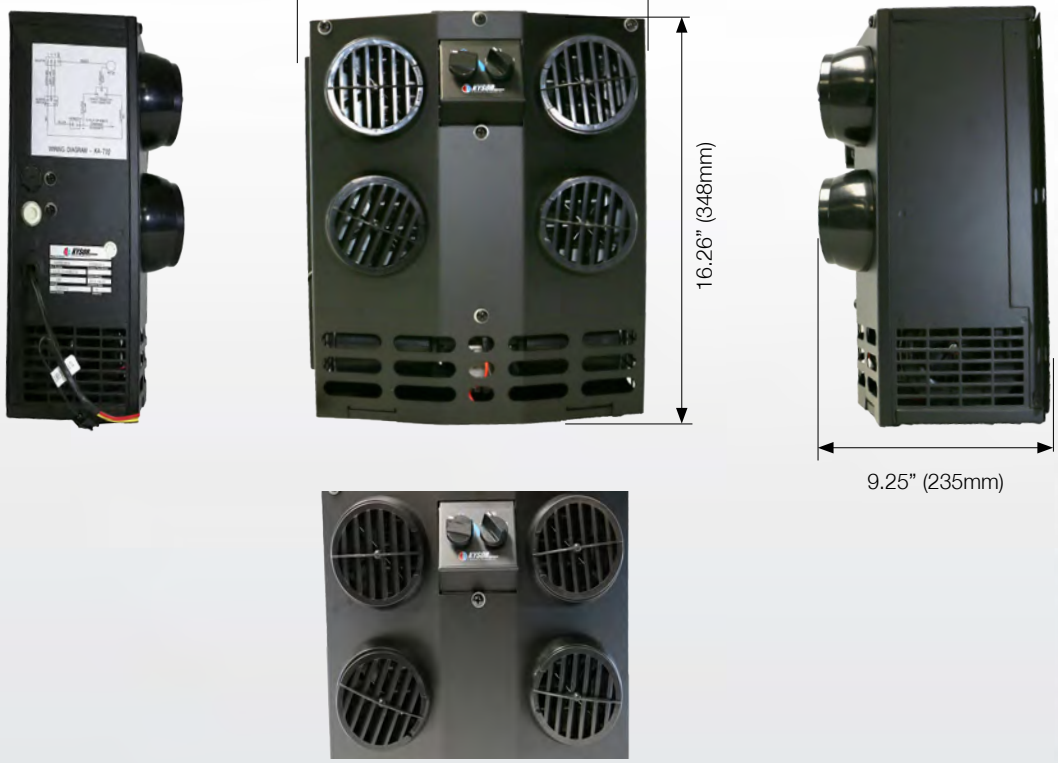

KA-710 Sidekick Order Guide

Part	Part Number	Notes
Unit Part Number	BSP00036AC12 BSP00036AC24	12V 24V
Blower Motor	1075043 1075047	12V 24V
Resistor	2075006 2075008	12V 24V
Thermostat	2399004 2399004	12V 24V
Evaporator	1675001 1675001	12V 24V
Fan Switch	2199005 2199005	12V 24V
Expansion Valve	1899035 1899035	12V 24V
Filter	3175005 3175005	12V 24V
Unit Universal Kit	3475006 2475006	12V 24V
Condenser	1599100 1599100	12V 24V
Crimper Kit (optional)	2610005 2610005	12V 24V
Floor Mounting Kit	BSP00001MOUNTKIT	
Wall Mounting Kit	BSP00002MOUNTKIT	

Advantages

- Operator Comfort
- Perfect match for your vehicle
- Very durable structure

Bergstrom STANDARD PRODUCTS

2390 Blackhawk Rd.
PO Box 6007
Rockford, IL 61125
866.507.9773
bergstrominc.com

Warranty

- 2-year limited warranty on parts and systems

© 2016 Bergstrom, Inc.

Features

- Heavy-duty steel construction
- Durable double wheel blower
- Variable speed blower switch
- Adjustable thermostat and water valve control

Air Distribution and Control Panel

Suggested Applications

Line Drawing

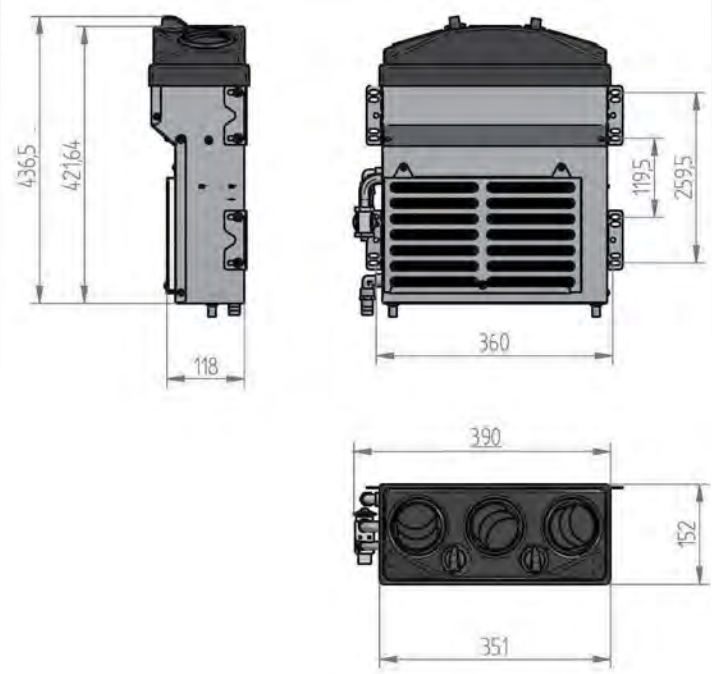

Technical Specifications

Model	Vertical Grande 12V	Vertical Grande 24V
Voltage	12V	24V
Power	28,320 BTU/hr (8,3 kW)	28,320 BTU/hr (8,3 kW)
Amps	15.2 A/h	8.5 A/h
Maximum air flow	460 SSCFM (780 m^3/hr)	460 SSCFM (780 m^3/hr)
Dimensions (W x H x D)	15.35in x 5.98in x 17.2in (390mm x 152mm x 436.55mm	15.35in x 5.98in x 17.2in (390mm x 152mm x 436.55mm
Weight	21.6 lbs. (9,8 kg)	21.6 lbs. (9,8 kg)
Mounting Position	Wall	Wall

Measurements are listed using the U.S. system with the metric system in parenthesis.

Recommended Remote Condensers: DBC-100 (page 81) or KC-750 (page 91)

© 2016 Bergstrom, Inc.

Dimensions layout

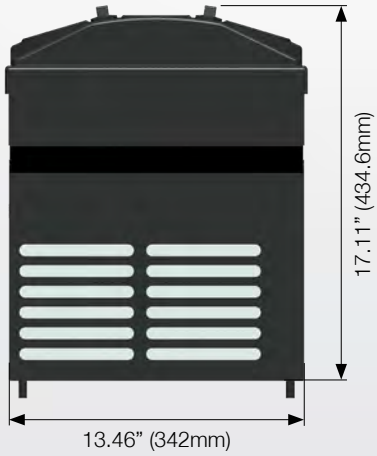

Vertical Grande A/C Order Guide

Part	Part Number	Notes
Unit Part Number	BSP00010AC12 BSP00010AC24	12V 24V
Blower Assembly	1000777603 1000783637	12V 24V
Resistor	2099027 2099027	12V 24V
Evaporator	1000763896 1000763896	12V 24V
Condenser	270501000 270501000	12V 24V

Advantages

- Operator Comfort
- Perfect match for your vehicle
- Best Value
- Very durable structure
- Powerful electric compressor when coupled with the DBC-100

Bergstrom STANDARD PRODUCTS

2390 Blackhawk Rd.
PO Box 6007
Rockford, IL 61125
866.507.9773
bergstrominc.com

Warranty

- 2-year limited warranty on parts and systems

© 2016 Bergstrom, Inc.

Features

- Heavy-duty steel construction
- Durable double wheel blower
- Variable speed blower switch
- Adjustable thermostat and water valve control

Air Distribution and Control Panel

Suggested Applications

Line Drawing

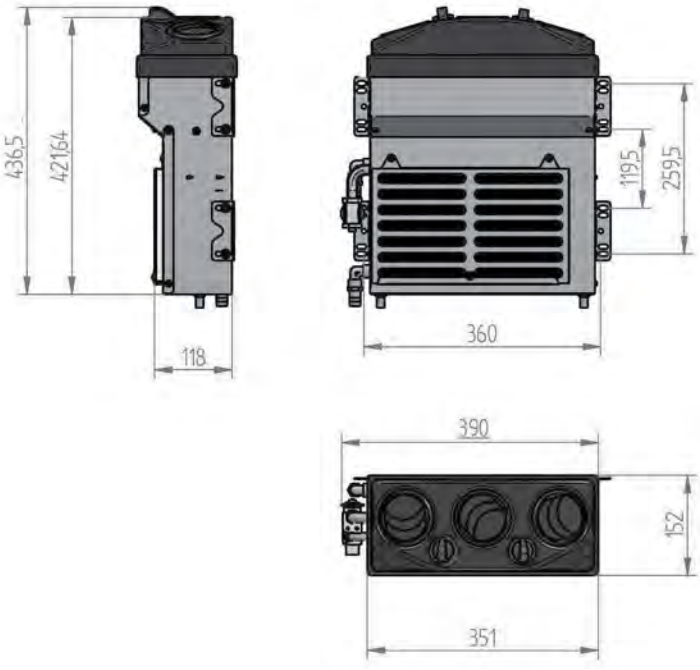

Technical Specifications

Model	Vertical Grande 12V	Vertical Grande 24V
Voltage	12V	24V
Power	Cold: 28,320 BTU/hr (8.3 kW) Hot: 19,110 BTU/hr (5.6 kW)	Cold: 28,320 BTU/hr (8.3 kW) Hot: 19,110 BTU/hr (5.6 kW)
Amps	15.2 A/h	8.5 A/h
Maximum air flow	460 SCFM (780 m^3/hr)	460 SCFM (780 m^3/hr)
Dimensions (W x H x D)	15.35in x 5.98in x 17.2in (390mm x 152mm x 436.55mm	15.35in x 5.98in x 17.2in (390mm x 152mm x 436.55mm
Weight	21.6 lbs. (9.8 kg)	21.6 lbs. (9.8 kg)
Mounting Position	Wall	Wall

Measurements are listed using the U.S. system with the metric system in parenthesis.

Recommended Remote Condensers: DBC-100 (page 81) or KC-750 (page 91)

© 2016 Bergstrom, Inc.

Dimensions layout

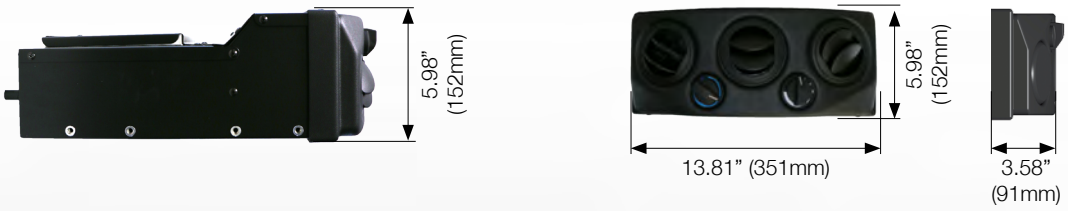

Vertical Grande HVAC Order Guide

Part	Part Number	Notes
Unit Part Number	BSP00007HVAC12 BSP00007HVAC24	12V 24V
Blower Assembly	1000777603 1000783637	12V 24V
Resistor	2099027 2099027	12V 24V
Evaporator	1000763896 1000763896	12V 24V
Condenser	270501000 270501000	12V 24V
Heater Coil		12V 24V
Water Valve		12V 24V

Advantages

- Operator Comfort
- Perfect match for your vehicle
- Best Value
- Very durable structure
- Powerful electric compressor when coupled with the DBC-100

Bergstrom STANDARD PRODUCTS

2390 Blackhawk Rd.
PO Box 6007
Rockford, IL 61125
866.507.9773
bergstrominc.com

Warranty

- 2-year limited warranty on parts and systems

© 2016 Bergstrom, Inc.

Condensers

DBC-100 81
KC-90 83
KC-110 85
KC-440 87
KC-500 89
KC-750 91
KC-800 SUPER AIR 93
KC-900 SUPER AIR PLUS 95
KC-1010 97
KC-3000 99

© 2016 Bergstrom, Inc.

Features

- Heavy-duty steel construction
- Integrated receiver drier
- Includes electrical motor compressor

Suggested Applications

Line Drawing

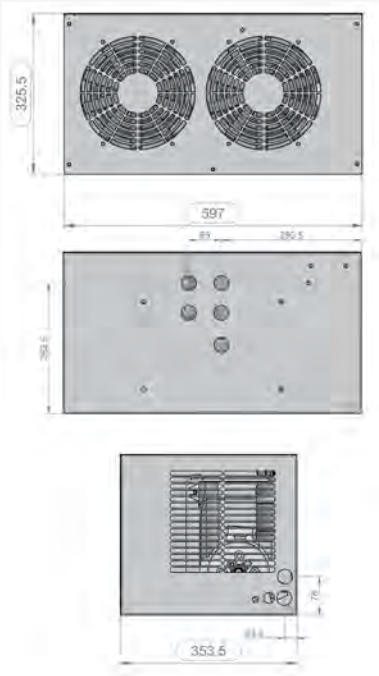

Technical Specifications

Model	DBC-100 12V	DBC-100 24V
Voltage	12V	24V
Power*	6,824 BTU/hr (2,0 kW)	10,920 BTU/hr (3,2 kW)
Amps**	32 A/h - 48 A/h	27 A/h - 35 A/h
Dimensions (L x W x H)	23.50in x 13.92in x 12.81in (597mm x 353.5mm x 325.5mm)	23.50in x 13.92in x 12.81in (597mm x 353.5mm x 325.5mm)
Weight	72.8 lbs. (33 kg)	72.8 lbs. (33 kg)
Mounting Position	Wall or Chassis	Wall or Chassis

(*) System output (BTU/hr) is based on system component-calculated capacities. In accordance with JIS standard test conditions: outside temperature 95°F (35°C), return temperature 80°F (27°C).

(**) Test conditions: outside temperature between 86°F (30°C) and 107°F (42°C).

Measurements are listed using the U.S. system with the metric system in parenthesis.

Recommended Remote Evaporator: Pascal A/C (page 63), Vertical Grande A/C (page 75) or Vertical Grande HVAC (page 77)

© 2016 Bergstrom, Inc.

Dimensions layout

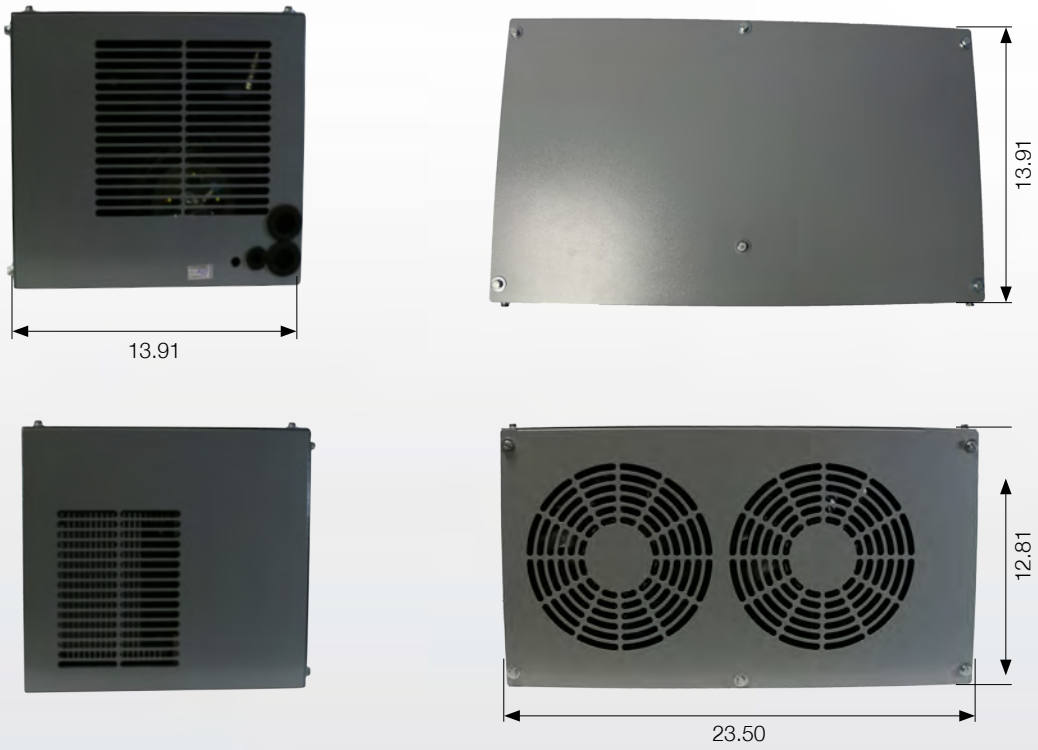

DBC-100 Order Guide

Part	Part Number	Notes
Unit Part Number	BSP00010COND12 BSP00010COND24	12V 24V
Condenser	270501000 270501000	12V 24V
Condenser Fan	1752050000 1753010000	12V 24V
Receiver Drier	1741330000 1741330000	12V 24V

Bergstrom STANDARD PRODUCTS
2390 Blackhawk Rd.
PO Box 6007
Rockford, IL 61125
866.507.9773
bergstrominc.com

Warranty

- 2-year limited warranty on parts and systems

© 2016 Bergstrom, Inc.

Features

- Low profile single fan rooftop condenser
- Heavy-duty steel base construction
- Lightweight and durable high impact UV protected plastic cover
- Heavy-duty tube and fin condenser coil
- Durable permanent magnet motor

Suggested Applications

Line Drawing

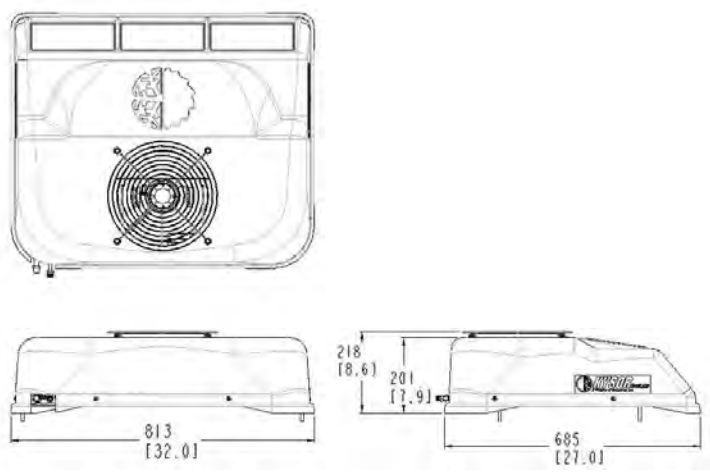

Technical Specifications

Model	KC-90 12V	KC-90 24V
Voltage	12V	24V
Power	25,933 BTU/hr (7,6 kW)	25,933 BTU/hr (7,6 kW)
Amps	10 A/h	5 A/h
Maximum air flow	775 SCFM (1,317 m³/hr)	775 SCFM (1,317 m³/hr)
Dimensions (L x W x H)	26.97in x 32in x 8.58in (685mm x 813mm x 218mm)	26.97in x 32in x 8.58in (685mm x 813mm x 218mm)
Weight	42.1 lbs. (19,1 kg)	42.1 lbs. (19,1 kg)
Mounting Position	Roof	Roof
Mounting Stud	(4) M8 thread	(4) M8 thread
Refrigeration Inlet	1/2" (#8) tube inverted male o-ring (3/4-16 UNF thread)	1/2" (#8) tube inverted male o-ring (3/4-16 UNF thread)
Refrigeration Outlet	3/8" (#6) tube inverted male o-ring (5/8-18 UNF thread)	3/8" (#6) tube inverted male o-ring (5/8-18 UNF thread)

Measurements are listed using the U.S. system with the metric system in parenthesis.

Recommended Remote Evaporator: KA-550 (page 67), KK-550 (page 69) or Pascal A/C (page 63)

© 2016 Bergstrom, Inc.

Dimensions layout

32” (813mm)

Black Hardware Kit	Part Number
Guard Fan	1000335550
M6 Hex Head 25mm Screws	1000898591
M6 Hex Head 16mm Screws	1000898585

KC-90 Order Guide

3.3125	Part Number	Notes
Unit Part Number	BSP00003COND12 BSP00003COND24	12V 24V
Condenser	1575025 1575025	12V 24V
Condenser Fan	1275003 1275003	12V 24V
Receiver Drier	1975001 1975001	12V 24V
Motor	1099087 1099087	12V 24V

Bergstrom STANDARD PRODUCTS

2390 Blackhawk Rd.
PO Box 6007
Rockford, IL 61125
866.507.9773
bergstrominc.com

Warranty

- 2-year limited warranty on parts and systems

© 2016 Bergstrom, Inc.

Features

- Low profile dual fan rooftop condenser
- Heavy-duty steel base construction
- Lightweight durable high impact UV protected plastic cover
- Heavy-duty tube and fin condenser coil
- Durable permanent magnet motor
- (4) Mounting studs, M8 thread

Suggested Applications

Line Drawing

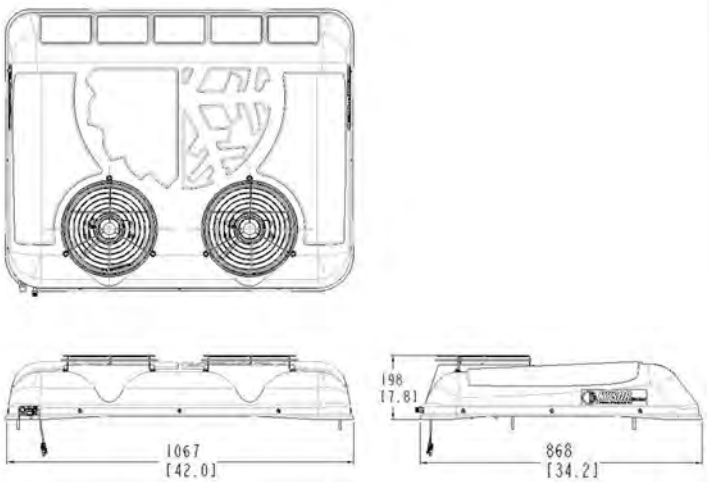

Technical Specifications

Model	KC-110 12V	KC-110 24V
Voltage	12V	24V
Power	45,040 BTU/hr (13,2 kW)	45,040 BTU/hr (13,2 kW)
Amps	22 A/h	11 A/h
Maximum air flow	1,250 SCFM (2,124 m^3/hr)	1,250 SCFM (2,124 m^3/hr)
Dimensions (L x W x H)	34.17in x 42in x 7.79in (868mm x 1067mm x 198mm)	34.17in x 42in x 7.79in (868mm x 1067mm x 198mm)
Weight	65 lbs. (29,5 kg)	65 lbs. (29,5 kg)
Mounting Position	Roof	Roof
Mounting Stud	(4) M8 thread	(4) M8 thread
Refrigeration Inlet	1/2" (#8) tube inverted male o-ring (3/4-16 UNF thread)	1/2" (#8) tube inverted male o-ring (3/4-16 UNF thread)
Refrigeration Outlet	3/8" (#6) tube inverted male o-ring (5/8-18 UNF thread)	3/8" (#6) tube inverted male o-ring (5/8-18 UNF thread)

Measurements are listed using the U.S. system with the metric system in parenthesis.

Recommended Remote Evaporator: KA-500 (page 53), KA-710 (page 73), KK-600 (page 71), Kelvin A/C (page 59) or Kelvin HVAC (page 61)

© 2016 Bergstrom, Inc.

Dimensions layout

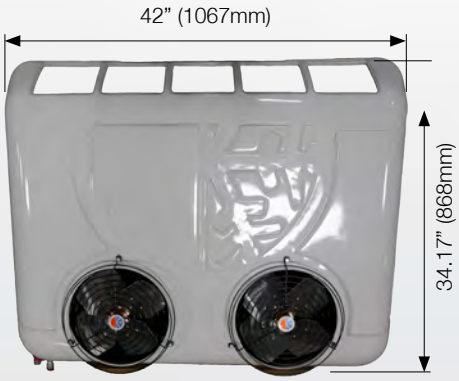

Black Hardware Kit	Part Number
Guard Fan	**1000924296**
M6 Hex Head 25mm Screws	**1000898591**
M6 Hex Head 16mm Screws	**1000898585**

KC-110 Order Guide

Part	Part Number	Notes
Unit Part Number	BSP00004COND12 BSP00004COND24	12V 24V
Condenser	1575026 1575026	12V 24V
Condenser Fan	1275003 1275003	12V 24V
Receiver Drier	1975001 1975001	12V 24V
Motor	1099087 1099087	12V 24V

Bergstrom STANDARD PRODUCTS

2390 Blackhawk Rd.
PO Box 6007
Rockford, IL 61125
866.507.9773
bergstrominc.com

Warranty

- 2-year limited warranty on parts and systems

© 2016 Bergstrom, Inc.

Features

- Dual axial fan rooftop mount
- Heavy-duty steel base construction
- Heavy-duty tube and fin condenser coil
- Durable permanent magnet motor
- Integrated receiver drier
- (4) Mounting studs
- Low pressure switch
- Relay

Suggested Applications

Line Drawing

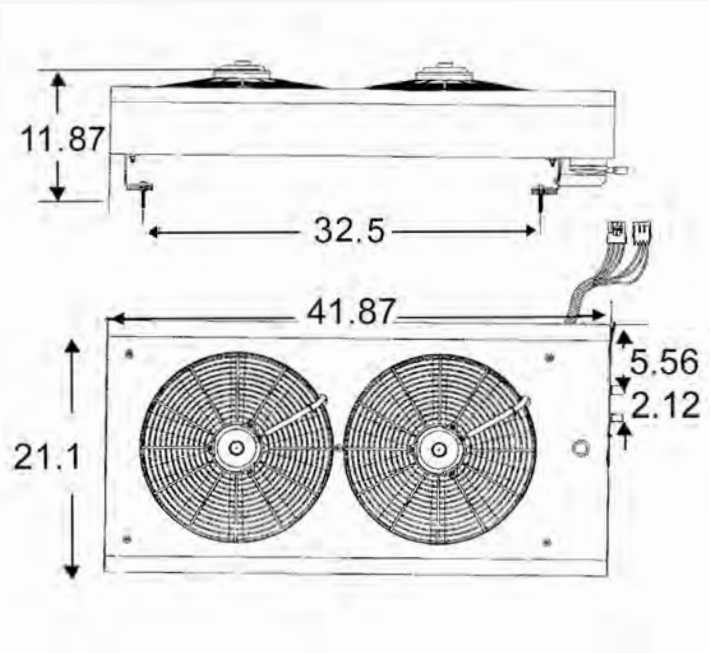

Technical Specifications

Model	KC-440 12V
Voltage	12V
Power	54,935 BTU/hr (16,1 kW)
Amps	30 A/h
Maximum air flow	1,900 SCFM (3,228 m^3/hr)
Dimensions (W x H x D)	41.87in x 11.87in x 21.1in (1063.5mm x 279.4mm x 535.9mm)
Weight	70 lbs. (31,8 kg)
Mounting Position	Roof
Mounting Stud	(4) M8 thread
Refrigeration Inlet	1/2" (#8) tube inverted male o-ring (3/4-16 UNF thread)
Refrigeration Outlet	3/8" (#6) tube inverted male o-ring (5/8-18 UNF thread)

Measurements are listed using the U.S. system with the metric system in parenthesis.

Recommended Remote Evaporator: KA-500 (page 53), KA-550 (page 67), KK-550 (page 69) or Kelvin HVAC (page 61)

© 2016 Bergstrom, Inc.

Dimensions layout

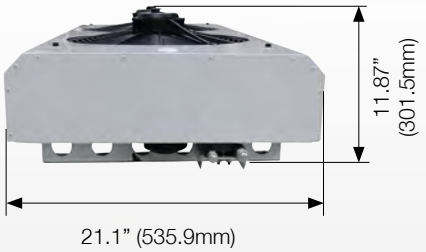

41.87” (1,063.5mm)

KC-440 Order Guide

Part	Part Number	Notes
Unit Part Number	BSP00013COND12	12V
Condenser	1575018	12V
Motor	1075028	12V
Receiver Drier	1975001	12V
Relay	2075003	12V
Low Pressure Switch	2275011	12V

Bergstrom STANDARD PRODUCTS
2390 Blackhawk Rd.
PO Box 6007
Rockford, IL 61125
866.507.9773
bergstrominc.com

Warranty

- 2-year limited warranty on parts and systems

© 2016 Bergstrom, Inc.

Features

- Single fan mount condenser
- Heavy-duty steel base construction
- Heavy-duty tube and fin condenser coil
- Durable permanent magnet motor
- Quick release latches on cover for easy access

Suggested Applications

Line Drawing

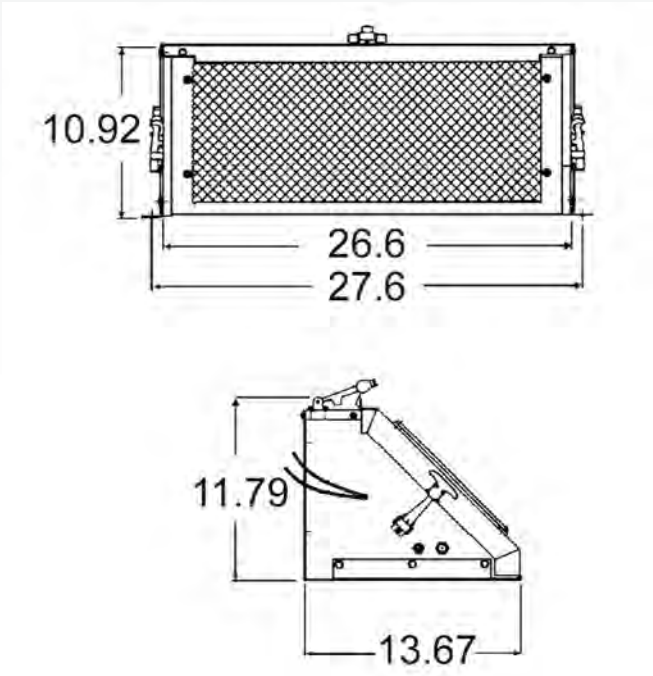

Technical Specifications

Model	KC-500 12V	KC-500 24V
Voltage	12V	24V
Power	30,000 BTU/hr (8,8 kW)	30,000 BTU/hr (8,8 kW)
Amps	16 A/h	8 A/h
Dimensions (W x H x D)	27.6in x 11.79in x 13.67in (701mm x 299.5mm x 347.2mm)	27.6in x 11.79in x 13.67in (701mm x 299.5mm x 347.2mm)
Weight	42 lbs. (19,1 kg)	42 lbs. (19,1 kg)
Mounting Position	Universal	Universal
Refrigeration Inlet	1/2" (#8) tube inverted male o-ring (3/4-16 UNF thread)	1/2" (#8) tube inverted male o-ring (3/4-16 UNF thread)
Refrigeration Outlet	3/8" (#6) tube inverted male o-ring (5/8-18 UNF thread)	3/8" (#6) tube inverted male o-ring (5/8-18 UNF thread)

Measurements are listed using the U.S. system with the metric system in parenthesis.

Recommended Remote Evaporator: KA-400 (page 49), KA-550 (page 67), KK-550 (page 69), KK-400 (page 51), KA-710 (page 73) or Pascal A/C (page 63)

© 2016 Bergstrom, Inc.

Dimensions layout

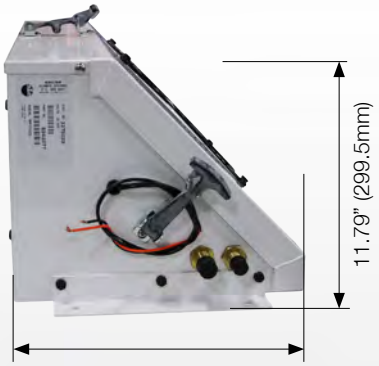

27.6" (701mm)

KC-500 Order Guide

Part	Part Number	Notes
Unit Part Number*	BSP00014COND12 BSP00014COND24	12V 24V
Condenser	1575008 1575008	12V 24V
Condenser Fan	1275003 1275003	12V 24V
Motor	1075009 1075016	12V 24V

*Installation kit included with system

Bergstrom STANDARD PRODUCTS
2390 Blackhawk Rd.
PO Box 6007
Rockford, IL 61125
866.507.9773
bergstrominc.com

Warranty

- 2-year limited warranty on parts and systems

© 2016 Bergstrom, Inc.

Features

- Heavy-duty steel base construction
- Dual axial fan
- Universal mount condenser
- Durable permanent magnet motor
- Heavy-duty tube and fin condenser coil
- Integrated receiver drier
- 20 amp fuse
- Relay

Suggested Applications

Line Drawing

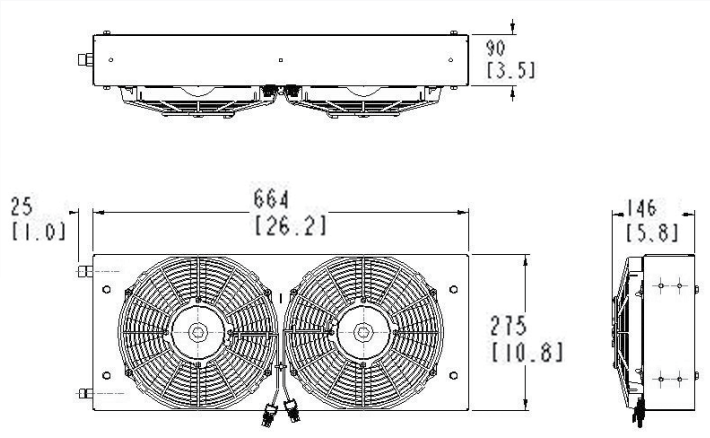

Technical Specifications

Model	KC-750 12V	KC-750 24V
Voltage	12V	24V
Power	32,075 BTU/hr (9,4 kW)	32,075 BTU/hr (9,4 kW)
Amps	10 A/h	20 A/h
Maximum air flow	1,000 SCFM (1,700 m^3/hr)	1,000SCFM (1,700 m^3/hr)
Dimensions (W x H x D)	26.14in x 10.83in x 5.75in (664mm x 275mm x 146mm)	26.14in x 10.83in x 5.75in (664mm x 275mm x 146mm)
Weight	13 lbs. (5,9 kg)	13 lbs. (5,9 kg)
Mounting Position	Roof or Wall	Roof or Wall
Refrigeration Inlet	1/2" (#8) tube inverted male o-ring (3/4-16 UNF thread)	1/2" (#8) tube inverted male o-ring (3/4-16 UNF thread)
Refrigeration Outlet	3/8" (#6) tube inverted male o-ring (5/8-18 UNF thread)	3/8" (#6) tube inverted male o-ring (5/8-18 UNF thread)

Measurements are listed using the U.S. system with the metric system in parenthesis.

Recommended Remote Evaporator: KA-400 (page 49), KA-550 (page 67), Kelvin A/C (page 59), Kelvin HVAC (page 61) or Pascal A/C (page 63)

© 2016 Bergstrom, Inc.

Dimensions layout

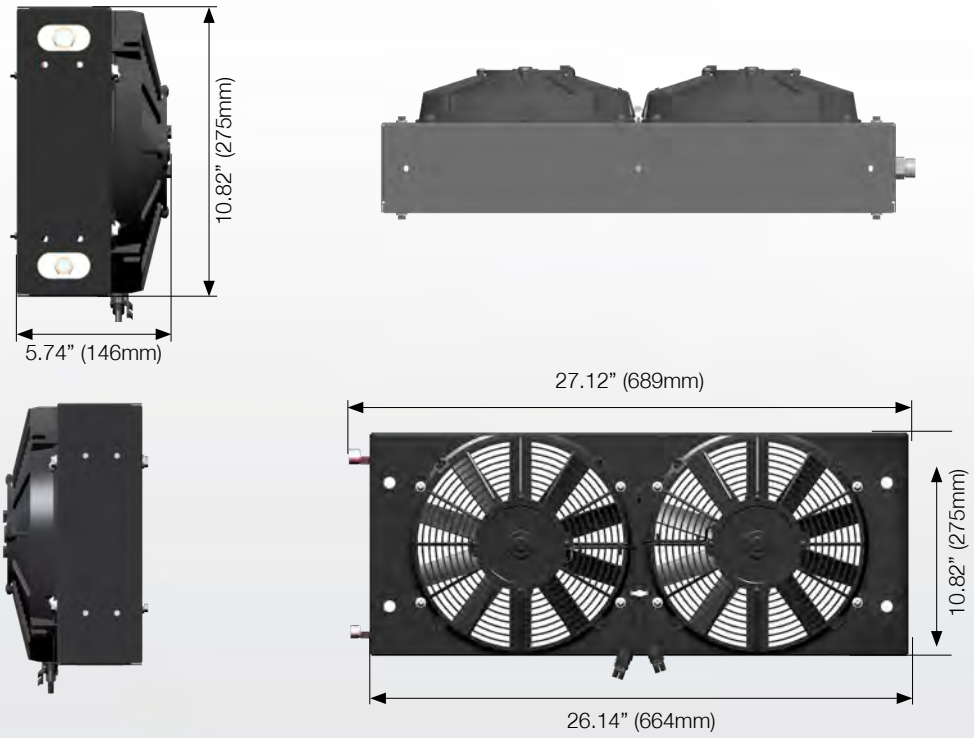

KC-750 Order Guide

Part	Part Number	Notes
Unit Part Number	BSP00005COND12 BSP00005COND24	12V 24V
Condenser		12V 24V
Condenser Fan	1075032 1075032	12V 24V
Relay	2099009 2099009	12V 24V

Bergstrom STANDARD PRODUCTS
2390 Blackhawk Rd.
PO Box 6007
Rockford, IL 61125
866.507.9773
bergstrominc.com

Warranty

- 2-year limited warranty on parts and systems

© 2016 Bergstrom, Inc.

Features

- High power dual fan skirt mount condenser
- Heavy-duty steel base construction
- Heavy-duty tube and fin condenser coil
- Durable permanent magnet motor
- Inegrated receiver drier

Suggested Applications

Line Drawing

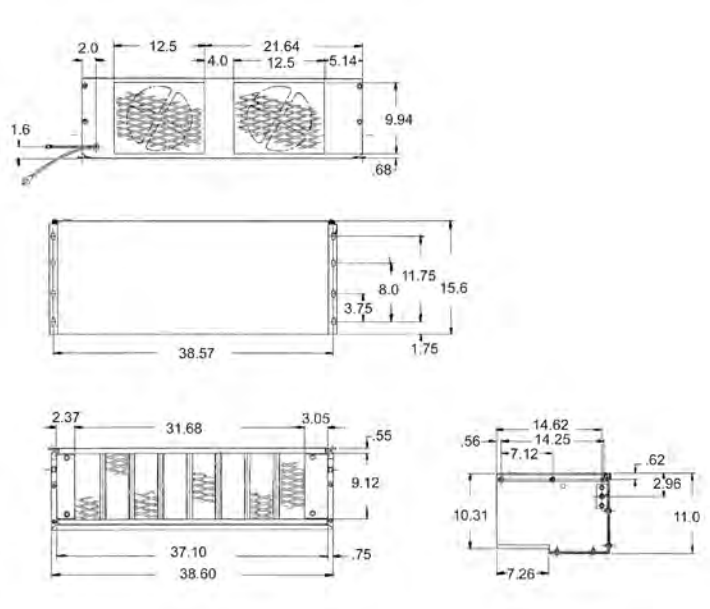

Technical Specifications

Model	KC-800 12V	KC-800 24V
Voltage	12V	24V
Power	45,000 BTU/hr (13,2 kW)	45,000 BTU/hr (13,2 kW)
Amps	25 A/h	25 A/h
Maximum air flow	1,180 SCFM (2,005 m^3/hr)	1,180 SCFM (2,005 m^3/hr)
Dimensions (W x H x D)	38.6in x 11in x 15.6in (981mm x 280mm x 396mm)	38.6in x 11in x 15.6in (981mm x 280mm x 396mm)
Weight	90 lbs. (40,8 kg)	90 lbs. (40,8 kg)
Mounting Position	Skirt	Skirt
Refrigeration Inlet	1/2" (#8) tube inverted male o-ring (3/4-16 UNF thread)	1/2" (#8) tube inverted male o-ring (3/4-16 UNF thread)
Refrigeration Outlet	3/8" (#6) tube inverted male o-ring (5/8-18 UNF thread)	3/8" (#6) tube inverted male o-ring (5/8-18 UNF thread)

Measurements are listed using the U.S. system with the metric system in parenthesis.

Recommended Remote Evaporator: KA-7100 (page 55)

© 2016 Bergstrom, Inc.

Dimensions layout

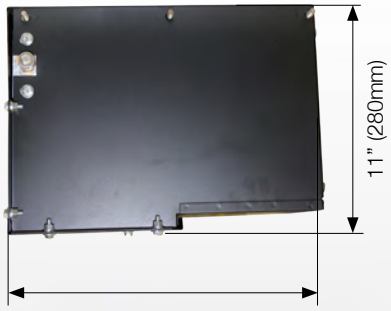

38.6” (981mm)

KC-800 Super Air Order Guide

Part	Part Number	Notes
Unit Part Number	BSP00016COND12 BSP00016COND24	12V 24V
Condenser	1575010	12V 24V
Condenser Fan	1275003	12V 24V
Receiver Drier	1975003	12V 24V
Motor	1099013	12V 24V

Bergstrom STANDARD PRODUCTS

2390 Blackhawk Rd.
PO Box 6007
Rockford, IL 61125
866.507.9773
bergstrominc.com

Warranty

- 2-year limited warranty on parts and systems

© 2016 Bergstrom, Inc.

Features

- Maximum performance
- Dual fan skirt mount condenser
- Heavy-duty steel base construction
- Heavy-duty tube and fin condenser coil
- Durable permanent magnet motor
- Inegrated receiver drier

Suggested Applications

Line Drawing

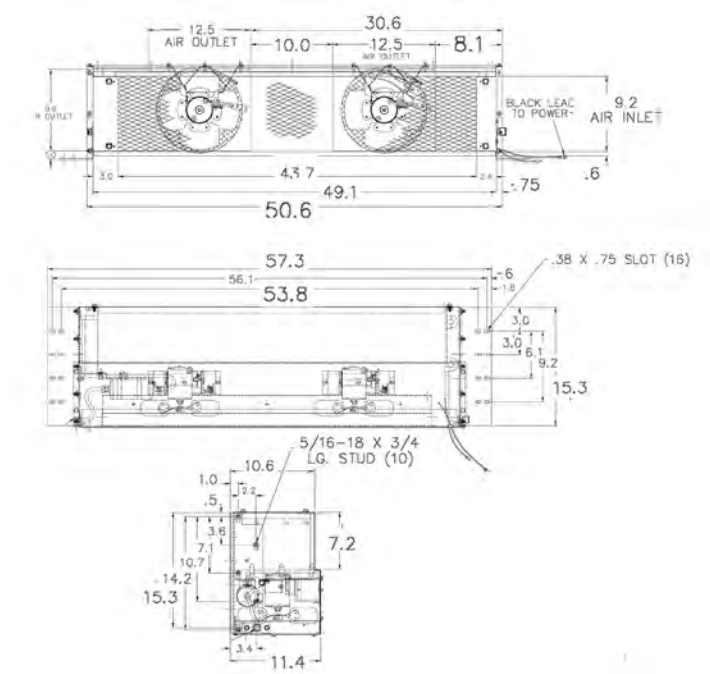

Technical Specifications

Model	KC-900 12V
Voltage	12V
Power	60,000 BTU/hr (17,6 kW)
Amps	26 A/h
Maximum air flow	1,431 SCFM (2,431 m^3/hr)
Dimensions (W x H x D)	57.3in x 15.3in x 11.4in (1,456mm x 389mm x 290mm)
Weight	115 lbs. (52,2 kg)
Mounting Position	Skirt
Refrigeration Inlet	1/2" (#8) tube inverted male o-ring (3/4-16 UNF thread)
Refrigeration Outlet	3/8" (#6) tube inverted male o-ring (5/8-18 UNF thread)

Measurements are listed using the U.S. system with the metric system in parenthesis.

Recommended Remote Evaporator: KA-7300 (page 57)

© 2016 Bergstrom, Inc.

Dimensions layout

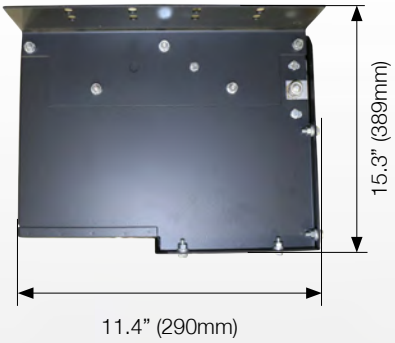

KC-900 Super Air Plus Order Guide

Part	Part Number	Notes
Unit Part Number	BSP00012COND12	12V
Condenser	1575010	12V
Condenser Fan	1275003	12V
Receiver Drier	1975003	12V
Motor	1099013	12V

Bergstrom STANDARD PRODUCTS

2390 Blackhawk Rd.
PO Box 6007
Rockford, IL 61125
866.507.9773
bergstrominc.com

Warranty

- 2-year limited warranty on parts and systems

© 2016 Bergstrom, Inc.

Features

- Dual fan universal mount
- Heavy-duty steel base construction
- Heavy-duty tube and fin condenser coil
- Durable permanent magnet motor
- Integrated receiver drier

Suggested Applications

Line Drawing

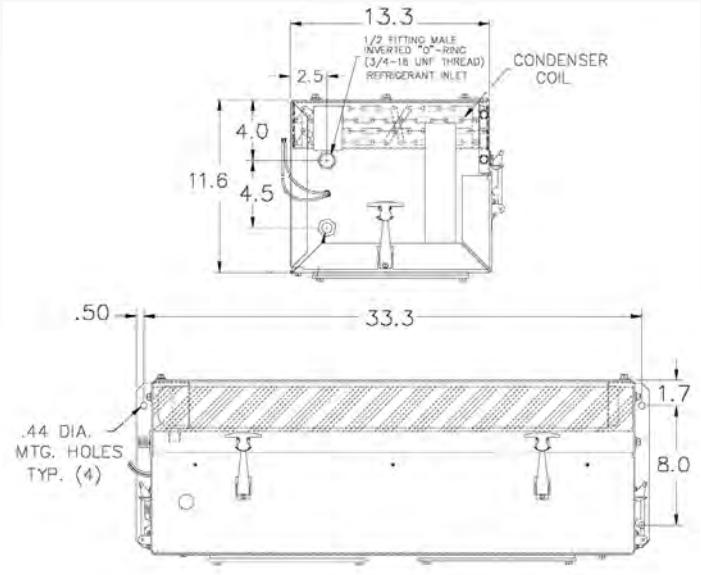

Technical Specifications

Model	KC-1010 12V	KC-1010 24V
Voltage	12V	24V
Power	45,040 BTU/hr (13,2 kW)	45,040 BTU/hr (13,2 kW)
Amps	25 A/h	12.5 A/h
Maximum air flow	1,600 SCFM (2,718 m^3/hr)	1,000SCFM (1,700 m^3/hr)
Dimensions (W x H x D)	33.3in x 11.6in x 13.3in (846mm x 295mm x 338mm)	33.3in x 11.6in x 13.3in (846mm x 295mm x 338mm)
Weight	84 lbs. (38,1 kg)	84 lbs. (38,1 kg)
Mounting Position	Roof or Skirt	Roof or Skirt
Refrigeration Inlet	1/2" (#8) tube inverted male o-ring (3/4-16 UNF thread)	1/2" (#8) tube inverted male o-ring (3/4-16 UNF thread)
Refrigeration Outlet	3/8" (#6) tube inverted male o-ring (5/8-18 UNF thread)	3/8" (#6) tube inverted male o-ring (5/8-18 UNF thread)

Measurements are listed using the U.S. system with the metric system in parenthesis.

Recommended Remote Evaporator: KA-500 (page 53), KA-550 (page 69), KA-710 (page 73), Kelvin A/C (page 59) or Kelvin HVAC (page 61)

© 2016 Bergstrom, Inc.

Dimensions layout

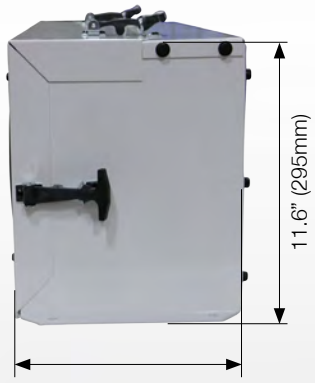

KC-1010 Order Guide

Part	Part Number	Notes
Unit Part Number	BSP00011COND12 BSP00011COND24	12V 24V
Condenser	1575018 1575018	12V 24V
Condenser Fan	1275003 1275003	12V 24V
Receiver Drier	1999009 1999009	12V 24V

Bergstrom STANDARD PRODUCTS
2390 Blackhawk Rd.
PO Box 6007
Rockford, IL 61125
866.507.9773
bergstrominc.com

Warranty

- 2-year limited warranty on parts and systems

© 2016 Bergstrom, Inc.

Features

- Low profile rooftop mount condenser
- Heavy-duty steel base construction
- Lightweight plastic cover
- Integrated receiver drier

Suggested Applications

Line Drawing

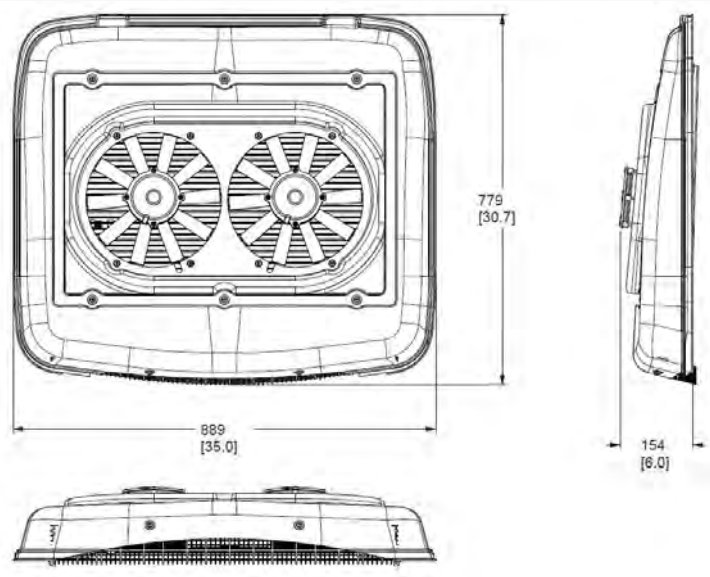

Technical Specifications

Model	KC-3000 12V
Voltage	12V
Power	35,860 BTU/hr (10,5 kW)
Amps	12 A/h
Maximum air flow	875 SCFM (1,486 m^3/hr)
Dimensions (L x W x H)	30.7in x 35in x 6.06in (779mm x 889mm x 154mm)
Weight	30 lbs. (13,6 kg)
Mounting Position	Roof

Measurements are listed using the U.S. system with the metric system in parenthesis.

Recommended Remote Evaporator: KA-3000 (page 45)

© 2016 Bergstrom, Inc.

Dimensions layout

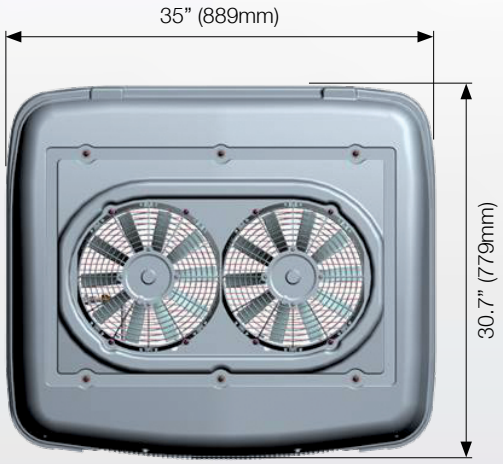

KC-3000 Order Guide

Part	Part Number	Notes
Unit Part Number	BSP00009COND12	12V
Condenser		12V
Condenser Fan		12V
Receiver Drier		12V

Bergstrom STANDARD PRODUCTS

2390 Blackhawk Rd.
PO Box 6007
Rockford, IL 61125
866.507.9773
bergstrominc.com

Warranty

- 2-year limited warranty on parts and systems

© 2016 Bergstrom, Inc.

Heater Systems

KH-150 103

KH-200 105

KH-300 107

KH-500 109

PASCAL HEATER. 111

© 2016 Bergstrom, Inc.

Features

- Compact auxiliary heater
- Heavy-duty steel construction
- (1) 2-speed motor
- Recirculating air filter

Suggested Applications

Line Drawing

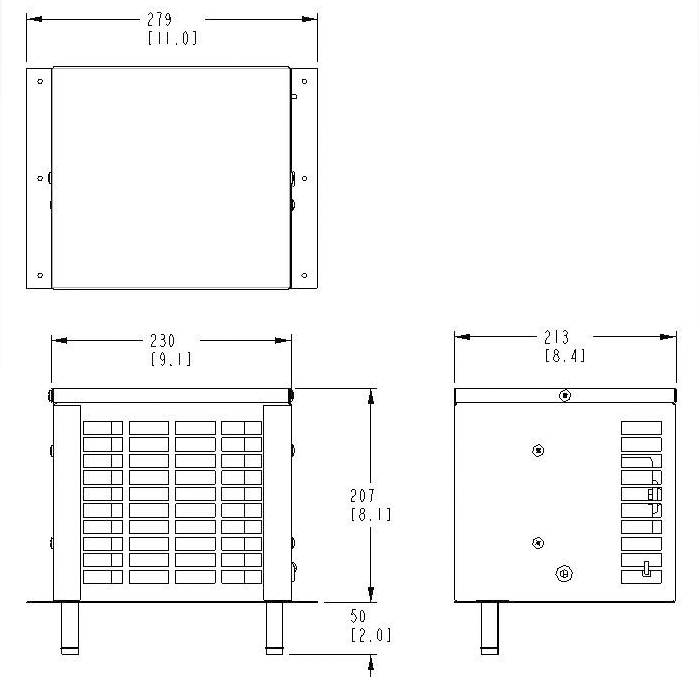

Technical Specifications

Model	KH-150 12V
Voltage	12V
Power	13,000 BTU/hr (3,8 kW)
Amps	3.6 A/h
Maximum air flow	115 SCFM (195 m^3/hr)
Dimensions (W x H x D)	9.05in x 8.14in x 8.38in (230mm x 207mm x 213mm)
Weight	9.8 lbs. (4,45 kg)
Mounting Position	Floor
Tube Connection	(2) 5/8" O.D.

Measurements are listed using the U.S. system with the metric system in parenthesis.

© 2016 Bergstrom, Inc.

Dimensions layout

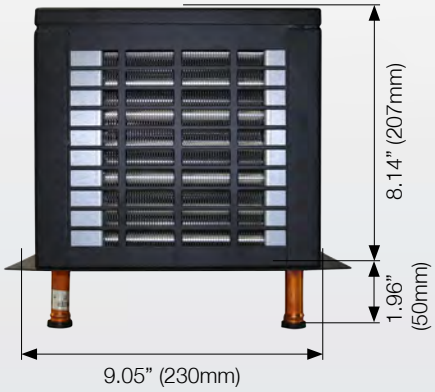

KH-150 Order Guide

Part	Part Number	Notes
Unit Part Number	BSP00004HEAT12	12V
Blower Motor	1099124	12V
Blower Fan	1299015	12V
Heater Coil	1799014	12V
Filter	3199027	12V
Control Switch Kit	3475077	

Bergstrom STANDARD PRODUCTS
2390 Blackhawk Rd.
PO Box 6007
Rockford, IL 61125
866.507.9773
bergstrominc.com

Warranty

- 2-year limited warranty on parts and systems

© 2016 Bergstrom, Inc.

Features

- Heavy-duty auxiliary heater
- Heavy-duty steel construction
- (1) 2-speed motor
- (2) Universal mounting brackets

Suggested Applications

Line Drawing

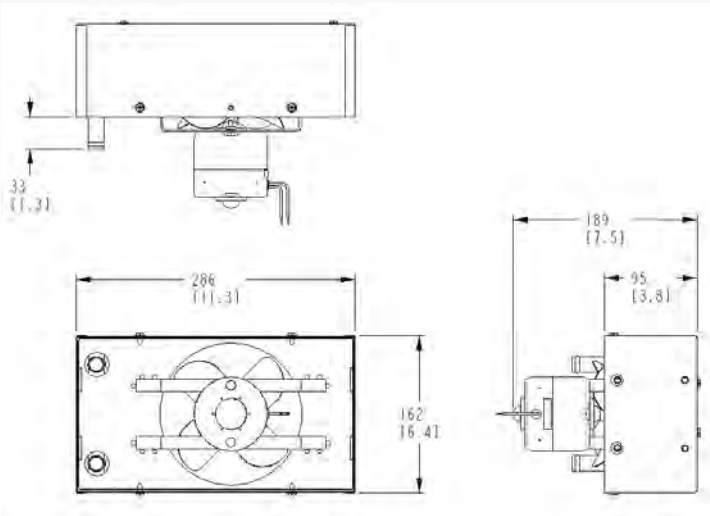

Technical Specifications

Model	KH-200 12V	KH-200 24V
Voltage	12V	24V
Power	18,360 BTU/hr (5,4 kW)	18,360 BTU/hr (5,4 kW)
Amps	1.53 A/h	1.5 A/h
Maximum air flow	145 SCFM (246 m^3/hr)	145 SCFM (246 m^3/hr)
Dimensions (W x H x D)	11.3in x 6.4in x 7.5in (286mm x 162mm x 189mm)	11.3in x 6.4in x 7.5in (286mm x 162mm x 189mm)
Weight	9 lbs. (4,1 kg)	9 lbs. (4,1 kg)
Mounting Position	Floor or Wall	Floor or Wall
Tube Connection	(2) 5/8" O.D.	(2) 5/8" O.D.

Measurements are listed using the U.S. system with the metric system in parenthesis.

© 2016 Bergstrom, Inc.

Dimensions layout

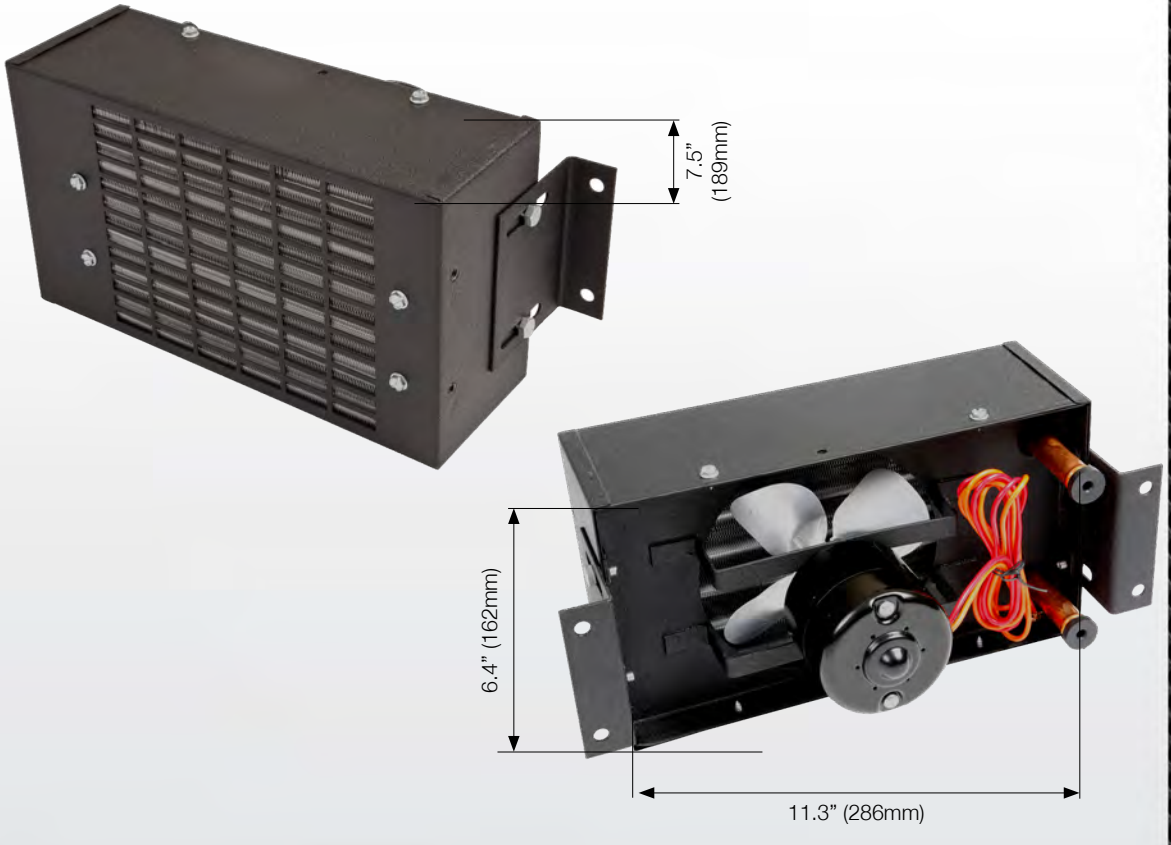

KH-200 Order Guide

Part	Part Number	Notes
Unit Part Number	BSP00015HEAT12 BSP00015HEAT24	12V 24V
Blower Motor	1075005 1075006	12V 24V
Blower Switch	3475035 3475035	12V 24V
Blower Fan	1275004 1275004	12V 24V
Heater Coil	1775001 1775001	12V 24V
Flush Mounting Kit	3475033 3475033	12V 24V
Motor Guard Kit	3475034 3475034	12V 24V
Control Switch Kit	3475035 3475035	12V 24V

Bergstrom STANDARD PRODUCTS
2390 Blackhawk Rd.
PO Box 6007
Rockford, IL 61125
866.507.9773
bergstrominc.com

Warranty

- 2-year limited warranty on parts and systems

© 2016 Bergstrom, Inc.

Features

- Heavy-duty auxiliary heater
- Heavy-duty steel construction
- (2) 2-speed motor
- (2) Universal mounting brackets

Suggested Applications

Line Drawing

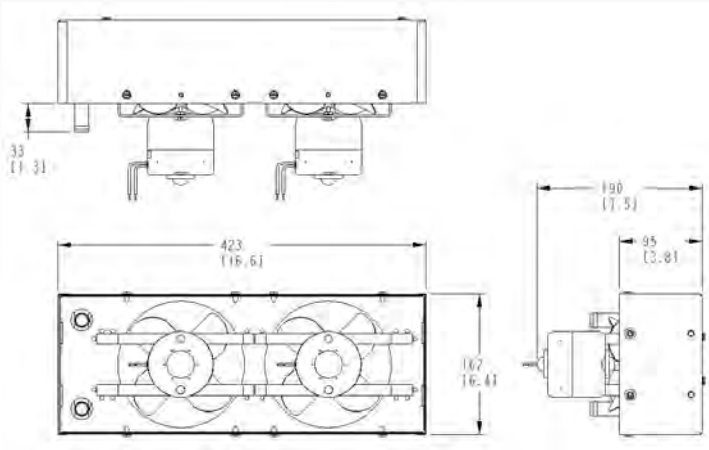

Technical Specifications

Model	KH-300 12V	KH-300 24V
Voltage	12V	24V
Power	30,0270 BTU/hr (8,8 kW)	30,027 BTU/hr (8,8 kW)
Amps	3 - 6 A/h	3 - 6 A/h
Maximum air flow	265 SCFM (450 m^3/hr)	265 SCFM (450 m^3/hr)
Dimensions (W x H x D)	16.6in x 6.4in x 7.5in (423mm x 162mm x 190mm)	16.6in x 6.4in x 7.5in (423mm x 162mm x 190mm)
Weight	14 lbs. (6,4 kg)	14 lbs. (6,4 kg)
Mounting Position	Floor or Wall	Floor or Wall
Tube Connection	(2) 5/8" O.D.	(2) 5/8" O.D.

Measurements are listed using the U.S. system with the metric system in parenthesis.

© 2016 Bergstrom, Inc.

Dimensions layout

KH-300 Order Guide

Part	Part Number	Notes
Unit Part Number	BSP00016HEAT12 BSP00016HEAT24	12V 24V
Blower Motor	1075005 1075006	12V 24V
Blower Fan	1275004 1275004	12V 24V
Heater Coil	1775009 1775009	12V 24V
Flush Mounting Kit	3475038	
Motor Guard Kit	3475039	
Control Switch Kit	3475040	

Bergstrom STANDARD PRODUCTS
2390 Blackhawk Rd.
PO Box 6007
Rockford, IL 61125
866.507.9773
bergstrominc.com

Warranty

- 2-year limited warranty on parts and systems

© 2016 Bergstrom, Inc.

Features

- Single Source or auxiliary heater
- Heavy-duty steel construction
- 3-speed resistor
- Durable double wheel blower
- (4) 4" front and (2) 4" side air outlet openings

Suggested Applications

Line Drawing

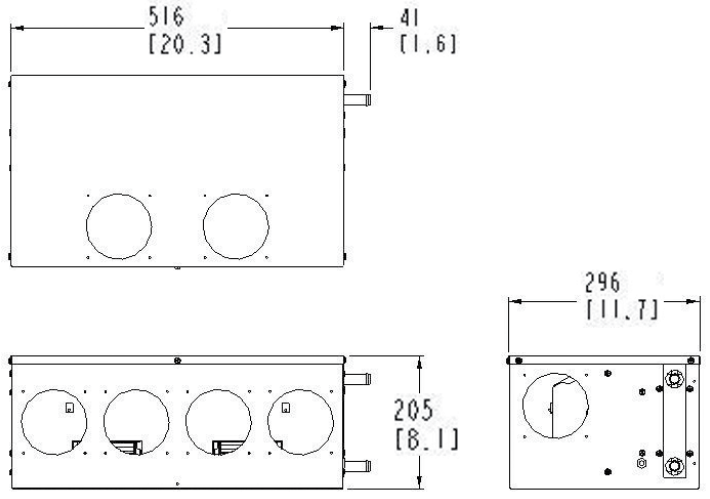

Technical Specifications

Model	KH-500 12V	KH-500 24V
Voltage	12V	24V
Power	52,206 BTU/hr (15,3 kW)	52,206 BTU/hr (15,3 kW)
Amps	19 A/h	9 A/h
Maximum air flow	500 SCFM (850 m^3/hr)	500 SCFM (850 m^3/hr)
Dimensions (W x H x D)	20.3in x 8.1in x 11.7in (516mm x 205mm x 296mm)	20.3in x 8.1in x 11.7in (516mm x 205mm x 296mm)
Weight	24 lbs. (10.9 kg)	24 lbs. (10.9 kg)
Mounting Position	Floor	Floor
Tube Connection	(2) 5/8" O.D.	(2) 5/8" O.D.

Measurements are listed using the U.S. system with the metric system in parenthesis.

© 2016 Bergstrom, Inc.

Dimensions layout

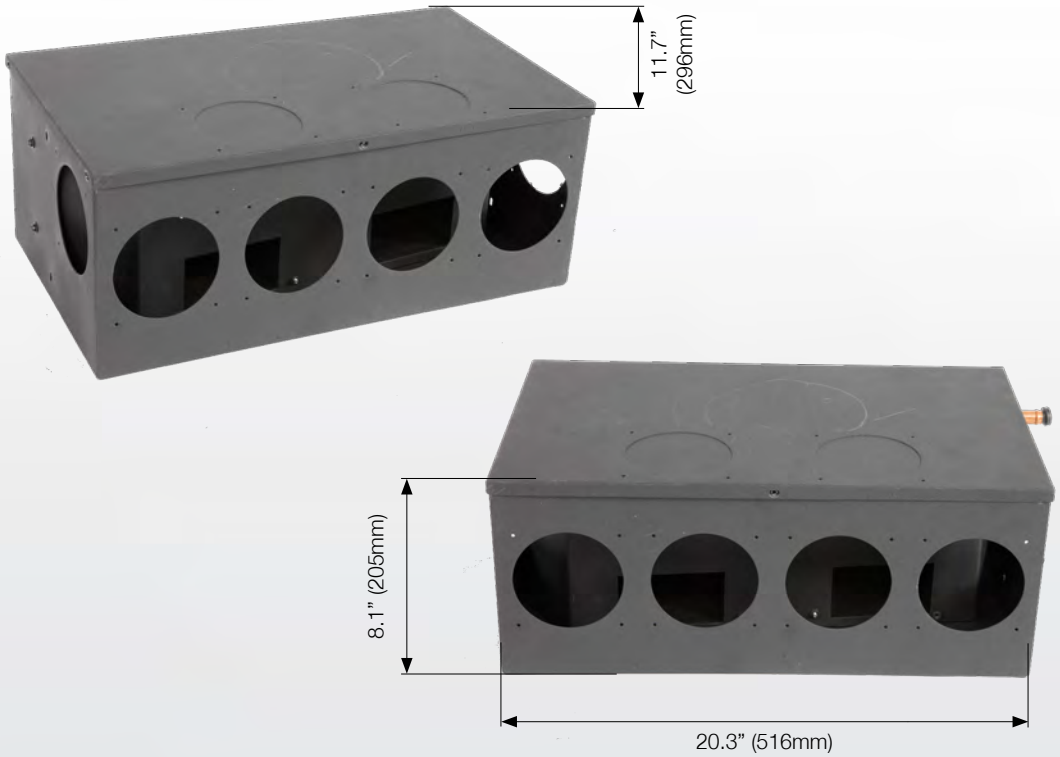

KH-500 Order Guide

Part	Part Number	Notes
Unit Part Number	BSP00018HEAT12 BSP00018HEAT24	12V 24V
Blower Motor	1075044 1075046	12V 24V
Heater Coil	1775018 1775018	12V 24V
Resistor	2075006 2075008	12V 24V

Bergstrom STANDARD PRODUCTS

2390 Blackhawk Rd.
PO Box 6007
Rockford, IL 61125
866.507.9773
bergstrominc.com

Warranty

- 2-year limited warranty on parts and systems

© 2016 Bergstrom, Inc.

Features

- Shell constructed with durable molded plastic
- Integrated single twin scroll blowers
- 3 air outlets (spigot/louver)
- 3 fan speeds

Air Distribution Panel

Spigot

Louver

See other available panel options on page 116.

Suggested Applications

Line Drawing

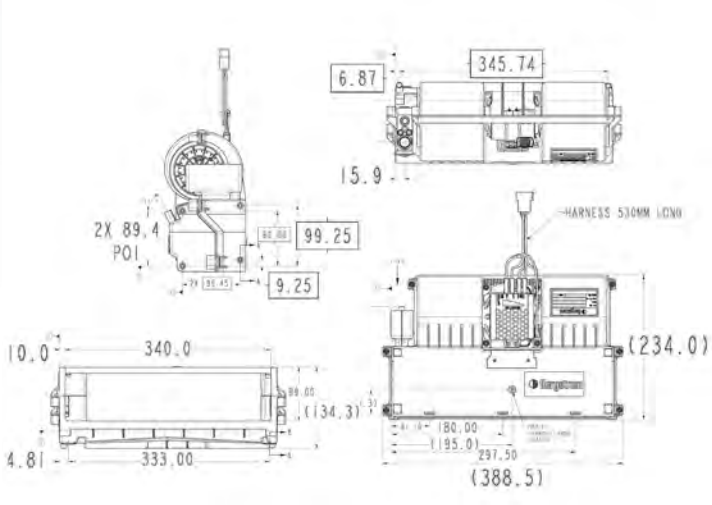

Technical Specifications

Model	Pascal 12V	Pascal 24V
Voltage	12V	24V
Power	25,590 BTU/hr (8,0 kW)	25,590 BTU/hr (8,0 kW)
Amps	10 A/h	5 A/h
Maximum air flow	265 SCFM (450 m^3/hr)	265 SCFM (450 m^3/hr)
Dimensions (L x W x H)	9.21in x 15.3in x 5.29in (234mm x 388.5mm x 134.3mm)	9.21in x 15.3in x 5.29in (234mm x 388.5mm x 134.3mm)
Weight	8.4 lbs. (3.8 kg)	8.4 lbs. (3.8 kg)
Mounting Position	Horizontal (Floor or Headliner)	Horizontal (Floor or Headliner)
Tube Connection	(2) 5/8" O.D.	(2) 5/8" O.D.

Measurements are listed using the U.S. system with the metric system in parenthesis.

© 2016 Bergstrom, Inc.

Dimensions layout

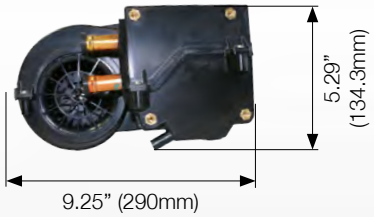

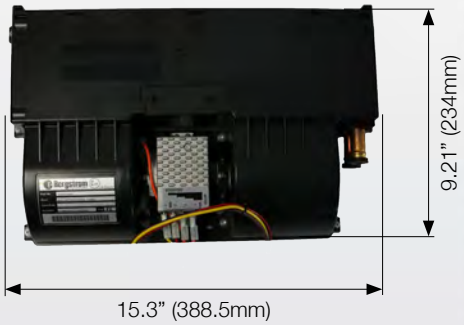

Pascal Heater Order Guide

Part	Part Number	Notes
Unit Part Number	BSP00013HEAT12 BSP00013HEAT24	12V 24V
Blower Motor	1000777603 1000783637	12V 24V
Heater Coil	1000960128 1000960128	12V 24V
Resistor	2099027 2099027	12V 24V
Expansion Valve	0990013359 0990013359	12V 24V

Advantages

- Operator Comfort
- Perfect match for your vehicle
- Best Value
- Very durable structure
- Virtually maintenance free

Bergstrom STANDARD PRODUCTS
2390 Blackhawk Rd.
PO Box 6007
Rockford, IL 61125
866.507.9773
bergstrominc.com

Warranty

- 2-year limited warranty on parts and systems

© 2016 Bergstrom, Inc.

System Kit Options

HD-1000, BLACK HARDWARE KIT 115

KA-300, BLACK HARDWARE KIT 115

KC-90, BLACK HARDWARE KIT 115

KC-110, BLACK HARDWARE KIT 115

KELVIN FASCIA OPTIONS AND BRACKETS 116

PASCAL FASCIA OPTIONS AND BRACKETS 116

© 2016 Bergstrom, Inc.

HD-1000, BLACK HARDWARE KIT

Black Hardware Kit	Part Number
Guard Fan	1000335550
M6 Hex Head 25mm Screws	1000898591
M6 Hex Head 16mm Screws	1000898585

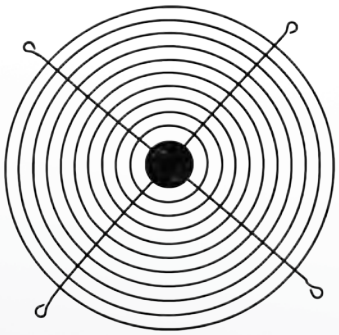

1000335550

KA-300, BLACK HARDWARE KIT

Black Hardware Kit	Part Number
Guard Fan	1000335550
M6 Hex Head 25mm Screws	1000898591
M6 Hex Head 16mm Screws	1000898585
Latch, Black	1000929194

1000929194

KC-90, BLACK HARDWARE KIT

Black Hardware Kit	Part Number
Guard Fan	1000335550
M6 Hex Head 25mm Screws	1000898591
M6 Hex Head 16mm Screws	1000898585

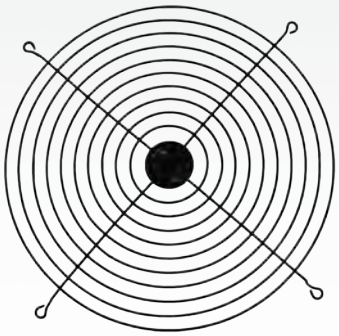

1000335550

KC-110, BLACK HARDWARE KIT

Black Hardware Kit	Part Number
Guard Fan	1000924296
M6 Hex Head 25mm Screws	1000898591
M6 Hex Head 16mm Screws	1000898585

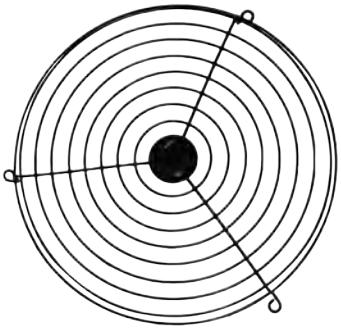

1000924296

© 2016 Bergstrom, Inc.

KELVIN FASCIA OPTIONS AND BRACKETS

Fascia Kits	Part Number
Outlet Panel 4 x 60 with black clips	1001004175
Outlet Panel, wave black 4 vent	1001004181
Outlet Panel, wave black 4 vent black	*1001161239*
Bracket Evaporator	1001015622
Bracket Evaporator	1001013646

1001004175

1001004181

1001161239

1001015622

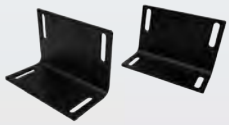

1001013646

PASCAL FASCIA OPTIONS AND BRACKETS

Fascia Kits	Part Number
Outlet Panel 3 x 60 with black clips	1001004144
Outlet Panel, wave black 3 vent	1001015619
Outlet Panel, wave black 3 vent black	1001161278
Bracket Evaporator	1001013603
Bracket Evaporator	1001015620

1001004144

1001015619

1001161278

1001013603

1001015620

Bergstrom STANDARD PRODUCTS

2390 Blackhawk Rd.
PO Box 6007
Rockford, IL 61125
866.507.9773
bergstrominc.com

Warranty

- 2-year limited warranty on parts and systems

© 2016 Bergstrom, Inc.

Bergstrom Electrified Systems (BES)

Bergstrom Electrified Systems has been designing and manufacturing main-powered and self-contained electric air conditioning equipment for over 40 years. Combining new technology with proven rugged design makes this equipment suitable on any mining or heavy industrial application.

F-SERIES 119

FFR6 HVAC SYSTEM 121

FVF120 PRESSURIZER 123

FVV50 PRESSURIZER 125

FVV60 PRESSURIZER 127

FVV150 PRESSURIZER 129

FVW100 PRESSURIZER 131

M-SERIES 133

MPV5 HVAC SYSTEM 135

MPV9 HVAC SYSTEM 137

T-SERIES 139

TBV6 HYDRAULIC COMPRESSOR. 141

TCR6 CONDENSER PACKAGE. 143

TDR5 HVAC SYSTEM. 145

TPR6 A/C SYSTEM. 147

TPW5 HVAC SYSTEM 149

© 2016 Bergstrom, Inc.

F-Series

The F-Series is our line of filter/pressurizers. In this series you can find anything from stand-alone self-cleaning filter packages to simple canister-like add-on filters.

We've designed the series using some of the industry's most efficiient filter media available and with efficiency ratings of 99% on particle sizes 0.5 microns and above.

Filtration & Pressurization Systems

In addition to dust filters, the following options are also available:

- Filters which remove gaseous contaminants often generated at industrial processing sites in enclosed spaces (such as underground mining)
- A wide range of electrical supplies to suite site availablility
- Larger capacities
- New air conditioning equipment that has higher capacity in cooling, heating and also has heavily upgraded filtration systems to be compatible with higher standards of indoor air quality
- Air compressor/receiver sets to suit self-cleaning filters

Product Data & Specifications

Technical Specifications:						
Model	FVV50	FVV60	FVV150	FVW100	FVF120	FFR6
Type of Unit	filter/blower	filter/blower	filter/blower	filter/blowers	filter/blowers	cool/heat/filters
Voltages Available V.D.C.	12 or 24	12 or 24	12 or 24	12 or 24	n/a	12 or 24
Voltages Available V.A.C.	n/a	115-1-50/60	115-1-50/60	115-1-50/60	115-1-50/60	115-1-50/60
Pressurizer Watts @ 24vdc	120	150	150	300	n/a	150
Pressurizer Watts @ 115vac	n/a	200	200	400	400	200
Pressurizer Airflow:						FVV60 FVW100
Clear filter, 0.00" w.c. ESP	85 CFM (40 l/s)	170 CFM (80 l/s)	315 CFM (150 l/s)	365 CFM (175 l/s)	365 CFM (175 l/s)	170 CFM 365 CFM
0.25" w.c. ESP	18 CFM (9 l/s)	145 CFM (70 l/s)	235 CFM (110 l/s)	325 CFM (155 l/s)	325 CFM (155 l/s)	145 CFM 325 CFM
0.50" w.c. ESP	5 CFM (2.5 l/s)	126 CFM (60 l/s)	210 CFM (100 l/s)	285 CFM (135 l/s)	260 CFM (125 l/s)	126 CFM 285 CFM
Max. Fan Static Pressure Available	0.65" w.c.	2.5" w.c.	2.2" w.c.	5.3" w.c.	4.7" w.c.	2.5" w.c. 5.3" w.c.
No. of Blower / Motors	1	1	1	2	2	1
No. of Motor Speeds	1	1	1	1	Variable Speed	2
Method of Speed Change				manual	Auto Pres. Transducer	manual
Pre-Cleaner ---Roughing	1	1	1	n/a	n/a	1
Pre-Filter ---- Disposable	n/a	n/a	n/a	n/a	n/a	12" x 24" x 1"
No. of Final Filter Elements	1	1	2	1	8	2
Permanent Filter Size	5"Dia x 11"Lg	6.5"Dia x 14"Lg	14.5"Dia x 24"Lg	6"Dia x 13"Lg	5"Dia x 24"Lg	13"H x 25"Lg
Type of Permanent Filter	Pleated	Pleated	Pleated	Pleated	Teflon Coated	Pleated
Filter Material	Paper	Paper	Paper	Spun Polyester	Polyester Sock	Spun Polyester
Filtration Efficiency	See Note	See Note	See Note	99% @ 0.3 microns	99% @ 0.3 microns	99% @ 0.3 microns
Outlet Spigot	2.75" x 4.25"	3.63" x 3.63"	5.5" Dia.	4" Dia.	6" Dia.	n/a
Compressed Air Inlet				3/8"FPT	3/8" FPT	
Compressed Air Pres. Req'd				60-100psig	60-100psig	
Mounting Type	Foot	Foot	Foot	Wall	Foot	Roof
Cleaning Trigger				Adjustable Timer	Adjustable Timer	
Motor External Protection	no	no	no	Circuit Breaker	Circuit Breaker	Circuit Breaker
Internal Thermal Prot.	yes	yes	yes	yes	yes	yes
Pressurizer Casing Mat'l	Painted Steel	Plastic	Stainless Steel	Stainless Steel	Stainless Steel	Plastic
Weight	17 lb (7,7 kg)	21 lb (9,5 kg)	87 lb (40 kg)	100 lb (45 kg)	285 lb (130 kg)	325 lb (148 kg)

Note #1: Air Cleaner Test, SAE J126, which includes 12% in the 0 - 5 micron range.
Note #2: 1" water column (w.c.) = 250 pascals

© 2016 Bergstrom, Inc.

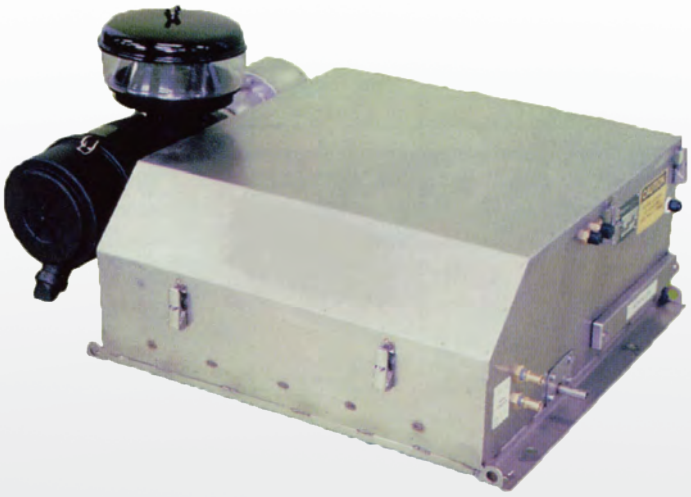

Features

- High heating and cooling capacity
- Large return air filter
- High efficiency, serviceable filter to ensure extremely clean air is supplied to the cab
- Optional pressurization system
- Electronic temperature control for optional in-console mounting
- Choice of either radiator-mounted or fan-forced condensers

Suggested Applications

Control Panel

BES

Line Drawing

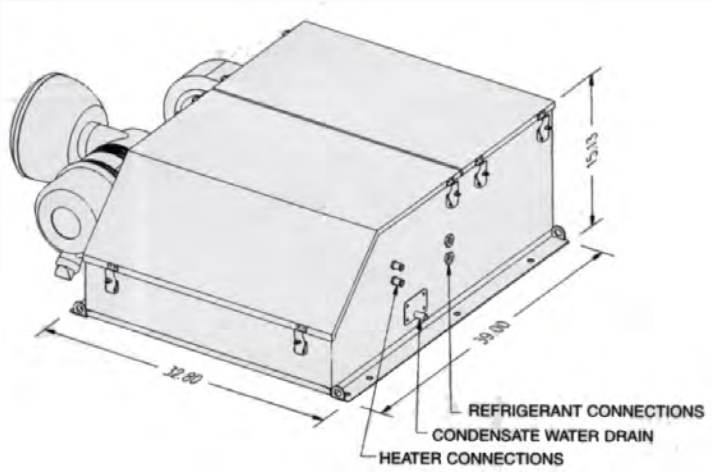

Technical Specifications

Model	FFR6 12V	FFR6 24V
Voltage	12V	24V
Amps	26 AMPS @ 12 V.D.C.	14 AMPS @ 24 V.D.C.
Maximum air flow	FVV60: 170 SCFM (289m³/hr) FVW100: 365 SCFM (620 m³/hr)	FVV60: 170 SCFM (289 m³/hr) FVW100: 365 SCFM (620 m³/hr)
Dimensions (L x W x H)	39in x 32.8in x 15.13in (990.6mm x 833mm x 384.3mm)	39in x 32.8in x 15.13in (990.6mm x 833mm x 384.3mm)
Weight	180 lbs. (81,6 kg)	180 lbs. (81,6 kg)
Mounting Position	Roof	Roof

Measurements are listed using the U.S. system with the metric system in parenthesis.

Recommended Pressurization Systems: FVV60 (page 127) or FVW100 (page 131)

© 2016 Bergstrom, Inc.

Dimensions layout

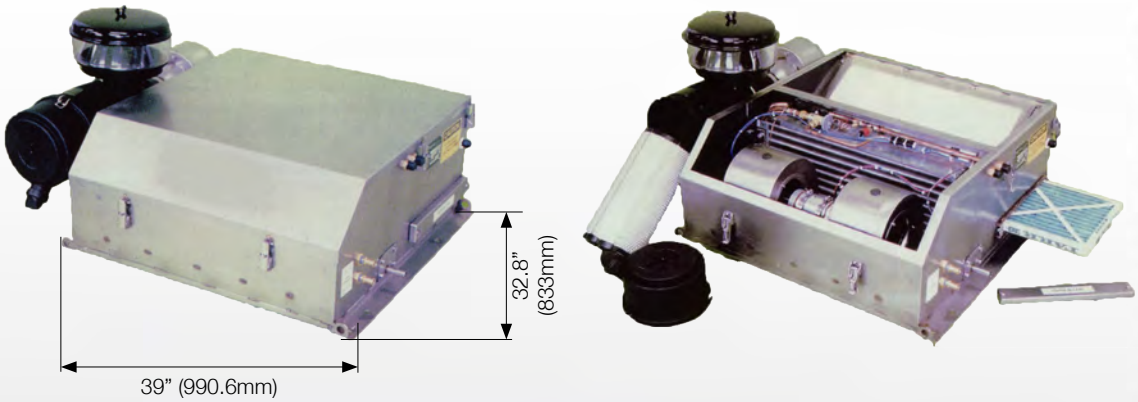

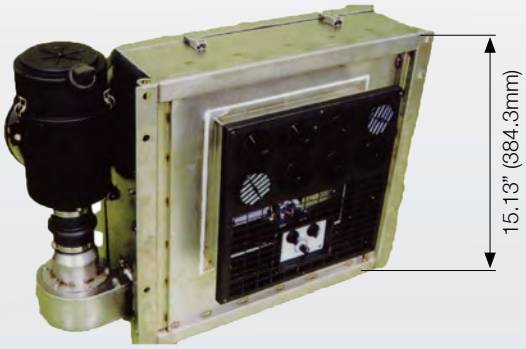

FFR6 Filtration & Pressurization Order Guide

Part	Part Number	Notes
Unit Part Number*		12V 24V

*Before ordering please contact Bergstrom for more details.

Model Specifications:	FFR6
Type of Unit	Cool/Heat/ Filters
Voltages Available V.D.C.	12 or 24
Voltages Available V.A.C.	115-1-50/60
Pressurizer Watts @ 24 V.D.C.	150
Pressurizer Watts @ 115 V.A.C.	2400
Pressurizer Airflow:	FVV60 or FVW100
Clear filter, 0.00" w.c. ESP	170 CFM 365 CFM
0.25" w.c. ESP	145 CFM 325 CFM
0.50" w.c. ESP	126 CFM 285 CFM
Max. Fan Static Pressure Avaliable	2.5" w.c. 5.3" w.c.
No. of Blower / Motors	1
No. of Motor Speeds	2
Method of Speed Change	Manual
Pre-Cleaner ---Roughing	1
Pre-Filter ---- Disposable	12" x 24" x 1"
No. of Final Filter Elements	2
Permanent Filter Size	13"H x 25"Lg
Type of Permanent Filter	Pleated
Filter Material	Spun Polyester
Filtration Efficiency	99% @ 0.3 Microns
Mounting Type	Roof
Motor External Protection	Circuit Breaker
Internal Thermal Protection	Yes
Pressurizer Casing Material	Plastic

Note #1: Air Cleaner Test, SAE J126, which includes 12% in the 0 - 5 micron range.
Note #2: 1" water column (w.c.) = 250 pascals

Bergstrom STANDARD PRODUCTS
2390 Blackhawk Rd.
PO Box 6007
Rockford, IL 61125
866.507.9773
bergstrominc.com

Warranty

- 2-year limited warranty on parts and systems

© 2016 Bergstrom, Inc.

NAME
FVF120 PRESSURIZER

VOLTS
120

DESCRIPTION
BES System

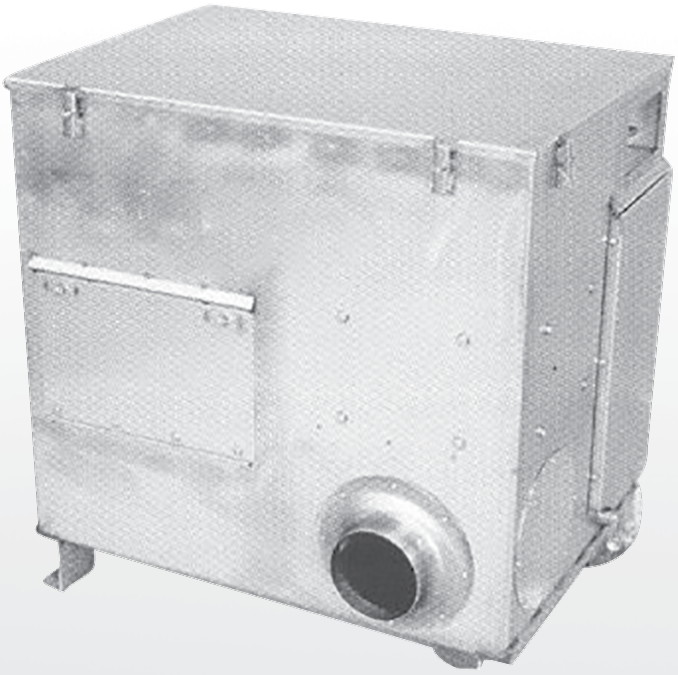

Features

- Suitable for main-powered electrical equipment
- Consists of eight teflon coated elements housed on a wire-frame structure with a venturi tube delivery
- (2) backward curved fans mounted in series to provide high static pressure capability
- Two-stage operation with the second fan coming on with drop in-room pressure alternatively
- Automatic speed control according to room pressure
- System is equipped with a receiver tank and solenoid valves for cleaning the air filtration system
- Back-flush cycle is on a variable time basis which is determined by site conditions. After a pre-set time, the fans will stop to assist thepurging process wiht compressed air. After another time delay, fans will start up again.
- System is designed as a stand-alone device and has the capacity to have up to three air discharge outlets from its base.

BES

Suggested Applications

Line Drawing

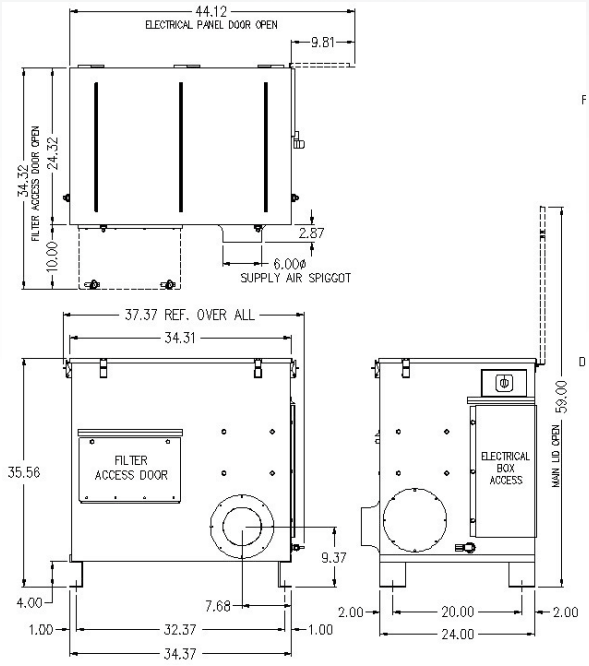

Technical Specifications

Model	FVF120 120V
Voltage	120V
Amps	3 AMPS @ 120 V.A.C. 20 AMPS @ 24 V.D.C.
Maximum air flow	365 SCFM (620 m³/hr)
Dimensions (L x W x H)	24in x 34.37in x 35.56in (609.6mm x 873mm x 903.2mm)
Weight	285 lbs. (129,3 kg)
Mounting Position	Foot

Measurements are listed using the U.S. system with the metric system in parenthesis.

© 2016 Bergstrom, Inc.

Dimensions layout

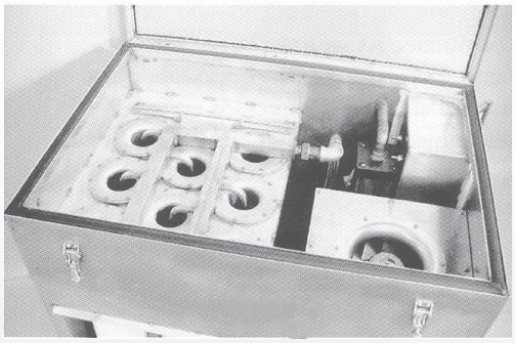

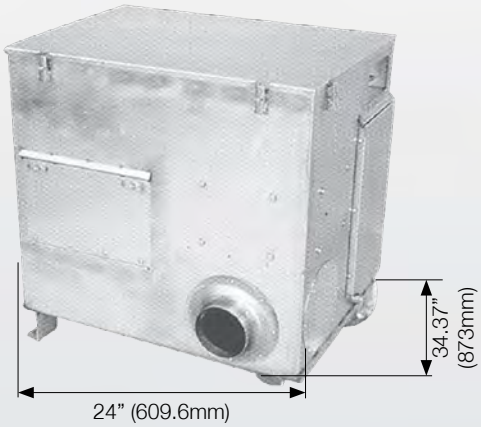

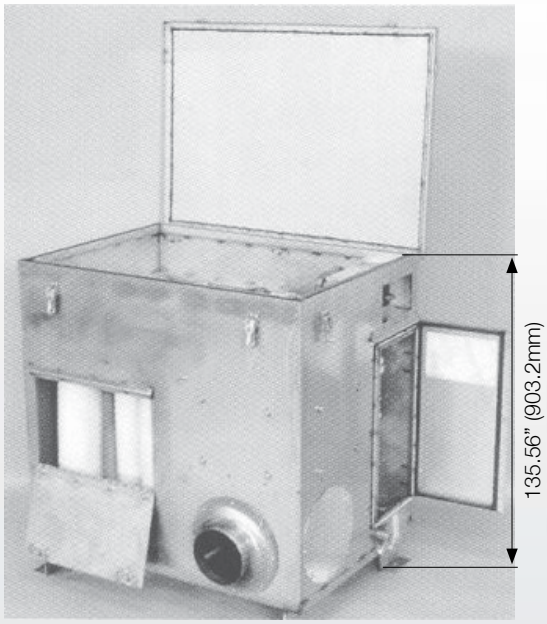

FVF120 Filtration & Pressurization Order Guide

Part	Part Number	Notes
Unit Part Number*		12V

*Before ordering please contact Bergstrom for more details.

Model Specifications:	FVF120
Type of Unit	Filter/ Blowers
Voltages Available V.A.C.	115-1-50/60
Pressurizer Watts @ 115 V.A.C.	400
Pressurizer Airflow:	
Clear filter, 0.00" w.c. ESP	365 CFM (175 l/s)
0.25" w.c. ESP	325 CFM (155 l/s)
0.50" w.c. ESP	260 CFM (125 l/s)
Max. Fan Static Pressure Avaliable	4.7" w.c.
No. of Blower / Motors	2
No. of Motor Speeds	Variable
Method of Speed Change	Auto Pres. Transducer
No. of Final Filter Elements	8
Permanent Filter Size	5"Dia x 24"Lg
Type of Permanent Filter	Teflon Coated
Filter Material	Polyester Stock
Filtration Efficiency	99% @ 0.3 Microns
Outlet Spigot	6" Dia.
Compressed Air Inlet	3/8" FPT
Compressed Air Pressure Required	60-100 psig
Mounting Type	Foot
Cleaning Trigger	Adjustable Timer
Motor External Protection	Circuit Breaker
Internal Thermal Protection	Yes
Pressurizer Casing Material	Stainless Steel

Note #1: Air Cleaner Test, SAE J126, which includes 12% in the 0 - 5 micron range.
Note #2: 1" water column (w.c.) = 250 pascals

Bergstrom STANDARD PRODUCTS
2390 Blackhawk Rd.
PO Box 6007
Rockford, IL 61125
866.507.9773
bergstrominc.com

Warranty
- 2-year limited warranty on parts and systems

© 2016 Bergstrom, Inc.

Features

- Stand-alone pressurizer for 12 and 24VDC
- Heavy-duty steel base construction
- Suitable for well-sealed cabs and enclosures
- A welded steel base construction and durable plastic cover
- Highly resistant in many environments

Suggested Applications

Line Drawing

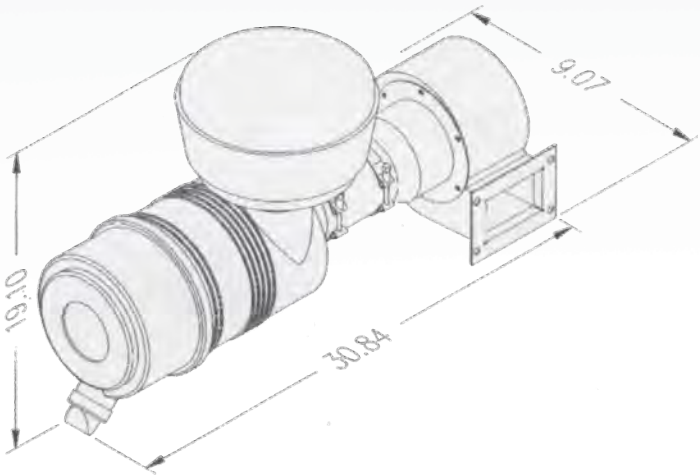

Technical Specifications

Model	FVV50 12V	FVV50 24V
Voltage	12V	24V
Amps	10 AMPS @ 12 V.D.C.	5 AMPs @ V.D.C.
Maximum air flow	85 SCFM (144 m^3/hr)	85 SCFM (144 m^3/hr)
Dimensions (L x W x H)	30.84in x 9.07in x 19.1in (783mm x 230mm x 485mm)	30.84in x 9.07in x 19.1in (783mm x 230mm x 485mm)
Weight	17 lbs. (7,7 kg)	17 lbs. (7,7 kg)
Mounting Position	Foot	Foot

Measurements are listed using the U.S. system with the metric system in parenthesis.

Auxillary piece for BES-series air conditioners.

© 2016 Bergstrom, Inc.

Dimensions layout

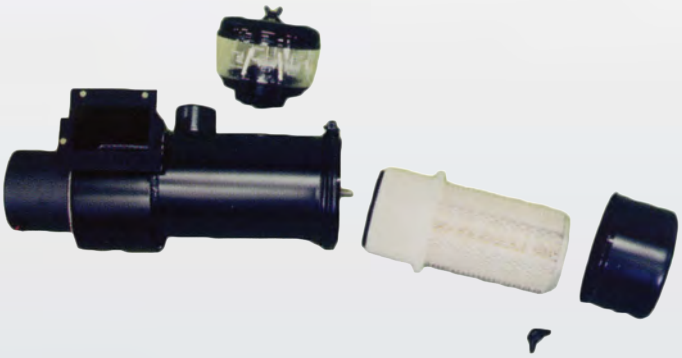

FVV50 Filtration & Pressurization Order Guide

Part	Part Number	Notes
Unit Part Number*		12V 24V

*Before ordering please contact Bergstrom for more details.

Model Specifications:	FVV50
Type of Unit	Filter/ Blower
Voltages Available V.D.C.	12 or 24
Pressurizer Watts @ 24 V.D.C.	120
Pressurizer Airflow:	
Clear filter, 0.00" w.c. ESP	85 CFM (40 l/s)
0.25" w.c. ESP	18 CFM (9 l/s)
0.50" w.c. ESP	5 CFM (2.5 l/s)
Max. Fan Static Pressure Avaliable	0.65" w.c.
No. of Blower / Motors	1
No. of Motor Speeds	1
Pre-Cleaner ---Roughing	1
No. of Final Filter Elements	1
Permanent Filter Size	5"Dia x 11"Lg
Type of Permanent Filter	Pleated
Filter Material	Paper
Filtration Efficiency	See Note
Outlet Spigot	2.75" x 4.25"
Mounting Type	Foot
Motor External Protection	No
Internal Thermal Protection	Yes
Pressurizer Casing Material	Painted Steel

Note #1: Air Cleaner Test, SAE J126, which includes 12% in the 0 - 5 micron range.
Note #2: 1" water column (w.c.) = 250 pascals

Bergstrom STANDARD PRODUCTS
2390 Blackhawk Rd.
PO Box 6007
Rockford, IL 61125
866.507.9773
bergstrominc.com

Warranty

- 2-year limited warranty on parts and systems

© 2016 Bergstrom, Inc.

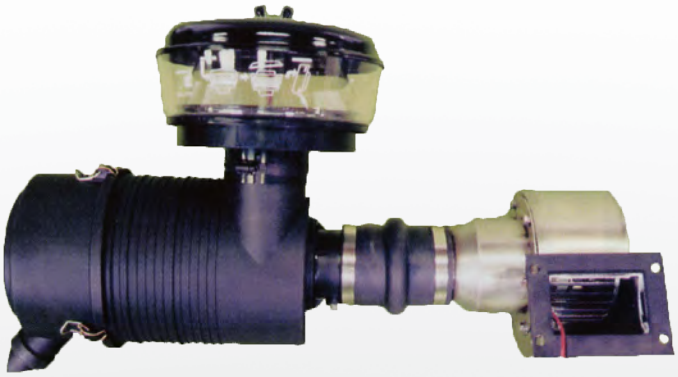

Features

- Suitable for well-sealed cabs and enclosures
- Heavy-duty steel base construction
- Durable cover, highly resistant in many environments
- Canister is flexible so it can be relocated to a remote site
- Plastic filter housing

Suggested Applications

Line Drawing

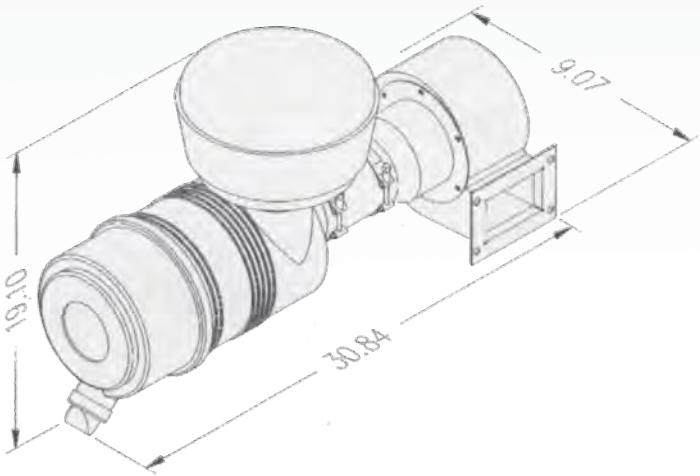

Technical Specifications

Model	FVV650 12V	FVV60 24V
Voltage	12V	24V
Amps	10 AMPS @ 12 V.D.C.	5 AMPS @ 24 V.D.C.
Maximum air flow	170 SCFM (289 m^3/hr)	170 SCFM (289 m^3/hr)
Dimensions (L x W x H)	30.84in x 9.07in x 19.1in (783mm x 230mm x 485mm)	30.84in x 9.07in x 19.1in (783mm x 230mm x 485mm)
Weight	21 lbs. (9,5 kg)	21 lbs. (9,5 kg)
Mounting Position	Foot	Foot

Measurements are listed using the U.S. system with the metric system in parenthesis.

Auxillary piece for BES-series air conditioners.

© 2016 Bergstrom, Inc.

Dimensions layout

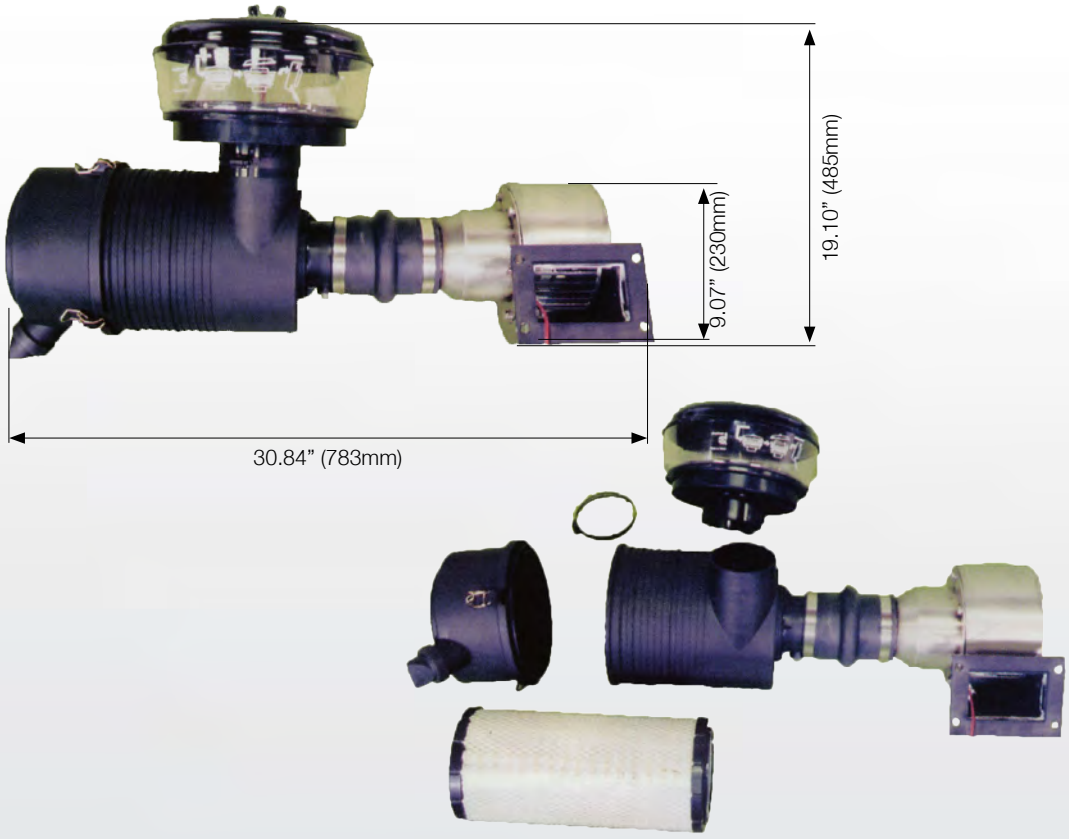

FVV50 Filtration & Pressurization Order Guide

Part	Part Number	Notes
Unit Part Number*		12V 24V

*Before ordering please contact Bergstrom for more details.

Model Specifications:	FVV60
Type of Unit	Filter/ Blower
Voltages Available V.D.C.	12 or 24
Voltages Available V.A.C.	115-1-50/60
Pressurizer Watts @ 24 V.D.C.	150
Pressurizer Watts @ 115 V.A.C.	200
Pressurizer Airflow:	
Clear filter, 0.00" w.c. ESP	170 CFM (80 l/s)
0.25" w.c. ESP	145 CFM (70 l/s)
0.50" w.c. ESP	126 CFM (60 l/s)
Max. Fan Static Pressure Avaliable	2.55" w.c.
No. of Blower / Motors	1
No. of Motor Speeds	1
Pre-Cleaner ---Roughing	1
No. of Final Filter Elements	1
Permanent Filter Size	6.5"Dia x 14"Lg
Type of Permanent Filter	Pleated
Filter Material	Paper
Filtration Efficiency	See Note
Outlet Spigot	3.63" x 3.63"
Mounting Type	Foot
Motor External Protection	No
Internal Thermal Protection	Yes
Pressurizer Casing Material	Plastic

Note #1: Air Cleaner Test, SAE J126, which includes 12% in the 0 - 5 micron range.
Note #2: 1" water column (w.c.) = 250 pascals

Bergstrom STANDARD PRODUCTS
2390 Blackhawk Rd.
PO Box 6007
Rockford, IL 61125
866.507.9773
bergstrominc.com

Warranty

- 2-year limited warranty on parts and systems

© 2016 Bergstrom, Inc.

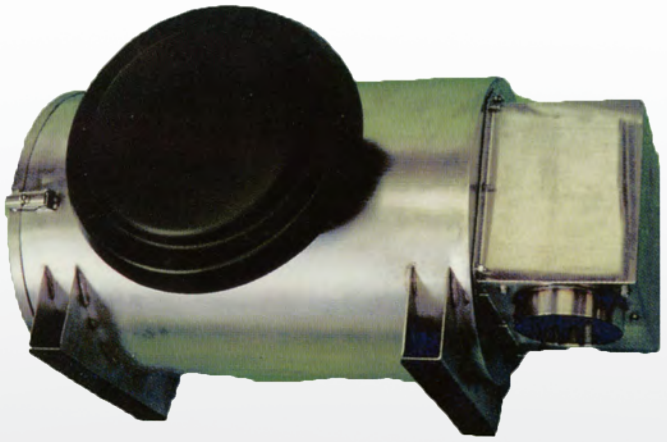

Features

- Suitable for well-sealed cabs and enclosures
- Heavy-duty steel base construction
- Durable cover, highly resistant in many environments
- Large filters that require manual cleaning
- Suitable for very dusty applications with extended intevals between cleaning
- Safety filter included
- System is available in A/C or D/C configurations

Suggested Applications

Line Drawing

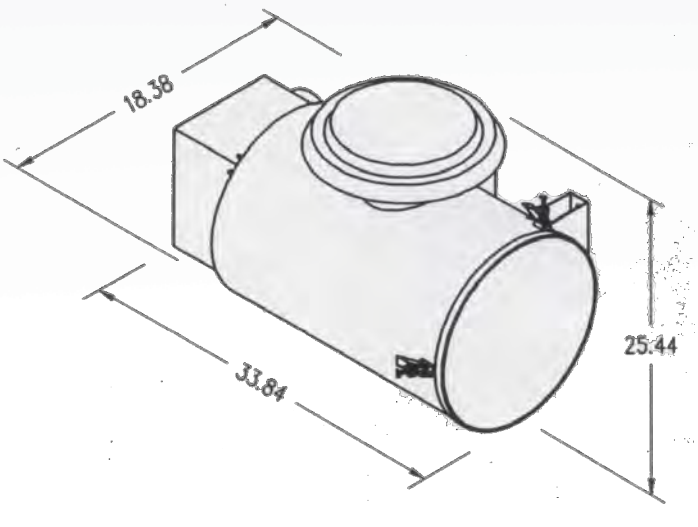

Technical Specifications

Model	FVV150 12V	FVV150 24V
Voltage	12V	24V
Amps	14 AMPS @ 12 V.D.C.	7 AMPS @ 24 V.D.C.
Maximum air flow	315 SCFM (535 m^3/hr)	315 SCFM (535 m^3/hr)
Dimensions (L x W x H)	33.84in x 18.38in x 25.44in (859.5mm x 466.9mm x 646.2mm)	33.84in x 18.38in x 25.44in (859.5mm x 466.9mm x 646.2mm)
Weight	88.2 lbs. (40 kg)	88.2 lbs. (40 kg)
Mounting Position	Foot	Foot

Measurements are listed using the U.S. system with the metric system in parenthesis.

© 2016 Bergstrom, Inc.

Dimensions layout

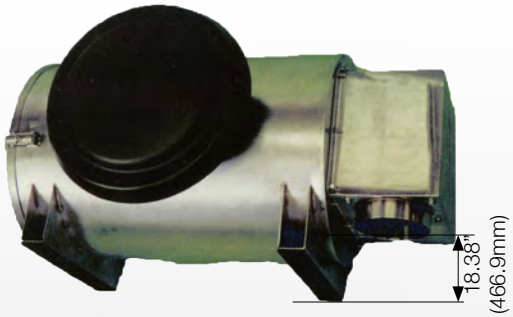

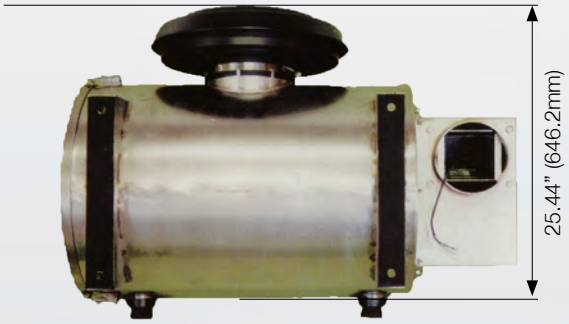

FVV150 Filtration & Pressurization Order Guide

Part	Part Number	Notes
Unit Part Number*		12V 24V

*Before ordering please contact Bergstrom for more details.

Model Specifications:	FVV150
Type of Unit	Filter/ Blower
Voltages Available V.D.C.	12 or 24
Voltages Available V.A.C.	115-1-50/60
Pressurizer Watts @ 24v V.D.C.	150
Pressurizer Watts @ 115 V.A.C.	200
Pressurizer Airflow:	
Clear filter, 0.00" w.c. ESP	315 CFM (150 l/s)
0.25" w.c. ESP	235 CFM (110 l/s)
0.50" w.c. ESP	210 CFM (100 l/s)
Max. Fan Static Pressure Avaliable	2.2" w.c.
No. of Blower / Motors	1
No. of Motor Speeds	1
Pre-Cleaner ---Roughing	1
No. of Final Filter Elements	2
Permanent Filter Size	14.5"Dia x 24"Lg
Type of Permanent Filter	Pleated
Filter Material	Paper
Filtration Efficiency	See Note
Outlet Spigot	5.5" Dia.
Mounting Type	Foot
Motor External Protection	No
Internal Thermal Protection	Yes
Pressurizer Casing Material	Stainless Steel

Note #1: Air Cleaner Test, SAE J126, which includes 12% in the 0 - 5 micron range.
Note #2: 1" water column (w.c.) = 250 pascals

Bergstrom STANDARD PRODUCTS
2390 Blackhawk Rd.
PO Box 6007
Rockford, IL 61125
866.507.9773
bergstrominc.com

Warranty
- 2-year limited warranty on parts and systems

© 2016 Bergstrom, Inc.

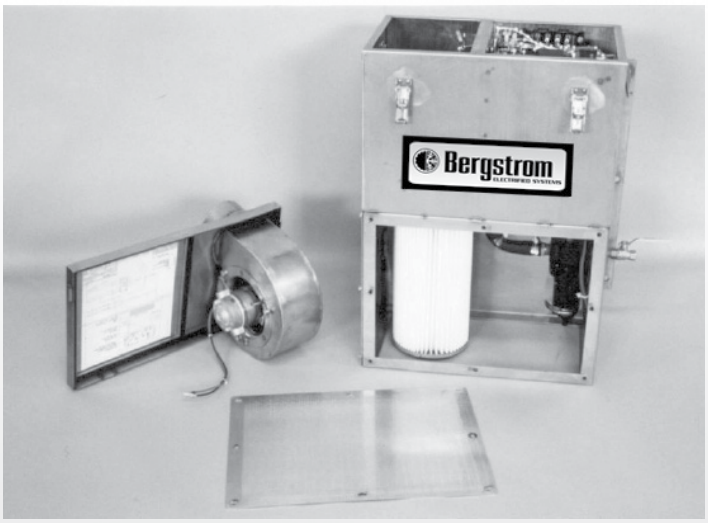

Features

- Stainless steel construction
- Impact resistant cover
- Highly efficient and washable filter
- (2) fans mounted in series to provide high static pressure capability
- Designed for use on cabs and enclosures of typically heavy diesel driven machinery where compressed air source is available
- Fan cycle times are adjustable to suit site conditions.
- Available in 24VDC or 120VAC voltages

Suggested Applications

Line Drawing

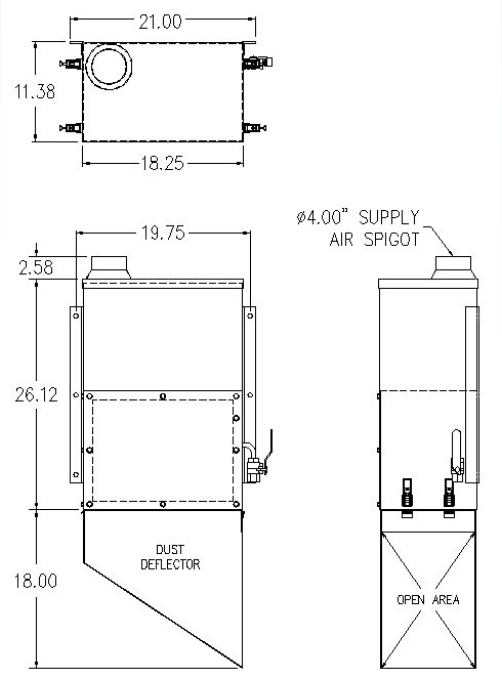

Technical Specifications

Model	FVW100 120V	FVW100 24V
Voltage	12V	24V
Amps	3 AMPS @ 120 V.A.C	7 AMPS @ 24 V.D.C.
Maximum air flow	365 SCFM (620 m^3/hr)	365 SCFM (620 m^3/hr)
Dimensions (W x H x D)	19.75in x 28.7in x 11.38in (501.7mm x 729mm x 289mm)	19.75in x 28.7in x 11.38in (501.7mm x 729mm x 289mm)
Weight	100 lbs. (45,5 kg)	100 lbs. (45,5 kg)
Mounting Position	Wall	Wall

Measurements are listed using the U.S. system with the metric system in parenthesis.

© 2016 Bergstrom, Inc.

Dimensions layout

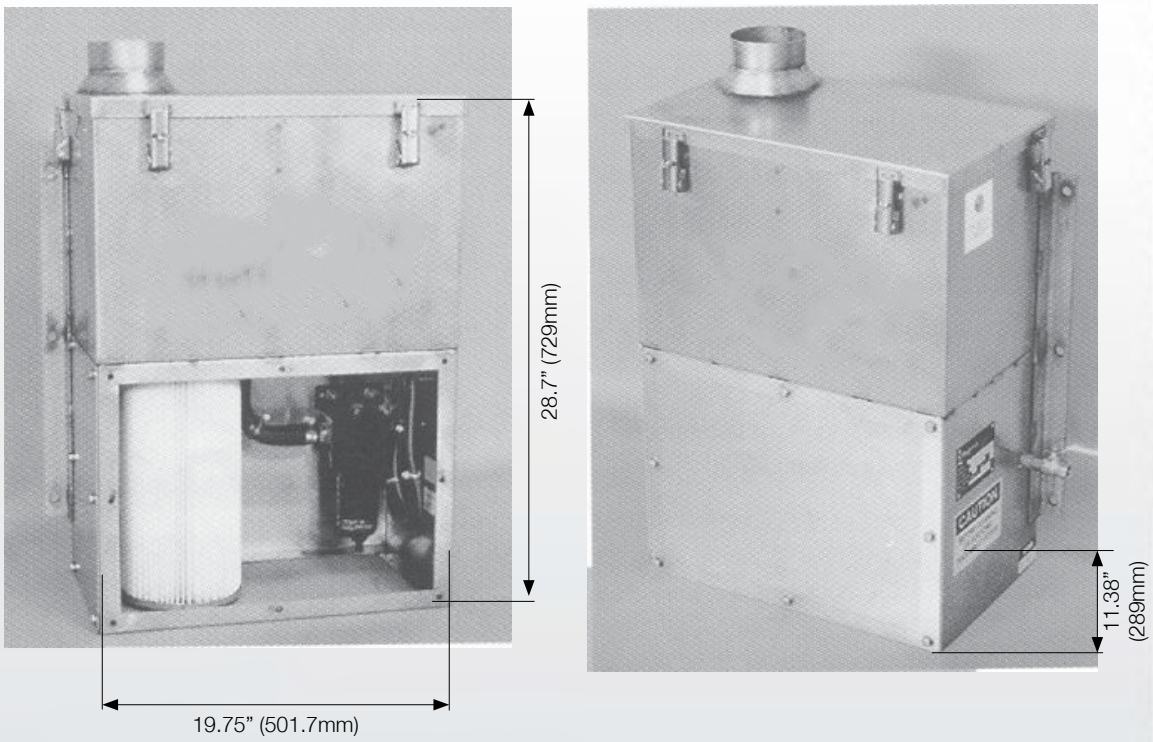

FVW100 Filtration & Pressurization Order Guide

Part	Part Number	Notes
Unit Part Number*		120V 24V
Dust Deflector		Right or left hand
Duct Kit		includes: (1) 10ft hose, (2) rubber couplings, (2) 90° rubber elbow and (8) clamps

*Before ordering please contact Bergstrom for more details.

Model Specifications:	FVW100
Type of Unit	Filter/ Blowers
Voltages Available V.D.C.	12 or 24
Voltages Available V.A.C.	115-1-50/60
Pressurizer Watts @ 24 V.D.C.	300
Pressurizer Watts @ 115 V.A.C.	400
Pressurizer Airflow:	
Clear filter, 0.00" w.c. ESP	365 CFM (175 l/s)
0.25" w.c. ESP	325 CFM (155 l/s)
0.50" w.c. ESP	285 CFM (135l /s)
Max. Fan Static Pressure Avaliable	5.3" w.c.
No. of Blower / Motors	2
No. of Motor Speeds	1
Method of Speed Change	Manual
No. of Final Filter Elements	1
Permanent Filter Size	6"Dia x 13"Lg
Type of Permanent Filter	Pleated
Filter Material	Spun Polyester
Filtration Efficiency	99% @ 0.3 Microns
Outlet Spigot	4" Dia.
Compressed Air Inlet	3/8" FPT
Compressed Air Pressure Required	60-100 psig
Mounting Type	Wall
Cleaning Trigger	Adjustable Timer
Motor External Protection	Circuit Breaker
Internal Thermal Protection	Yes
Pressurizer Casing Material	Stainless Steel

Note #1: Air Cleaner Test, SAE J126, which includes 12% in the 0 - 5 micron range.
Note #2: 1" water column (w.c.) = 250 pascals

Bergstrom STANDARD PRODUCTS
2390 Blackhawk Rd.
PO Box 6007
Rockford, IL 61125
866.507.9773
bergstrominc.com

Warranty

- 2-year limited warranty on parts and systems

© 2016 Bergstrom, Inc.

M-Series

The multipurpose M-Series is designed to be used on larger cabs where 3-phase electrical power is available, such as draglines, drills, crane cabs and shovels. These are the largest systems in the Bergstrom line and are available in capacitites of 18,000 BTU/hr to 54,000 BTU/hr. Various voltages are available.

Available Power Options:

- 208-230/1/60
- 200-230/3/60
- 200-220/3/50
- 380-415/3/50
- 460/3/60
- 460/3/50
- 575/3/60

A variety of control voltages also available

Special Options:

- Coated Coils
- Alternative High Ambient Refrigerants

Product Data & Specifications

Technical Specifications:		
Model	MPV5	MPV9
Cooling Capacity	18,000 btu/hr (5,2 kW)	31,000 btu/hr (8,9 kW)
Heating Capacity	34,000 btu/hr (10,0 kW)	41,000 btu/hr (12,0 kW)
Heating Stages	two	two
Airflow - High Speed	600 CFM (280 l/s)	1300 CFM (610 l/s)
Airflow - Low Speed	500 CFM (240 l/s)	870 CFM (410 l/s)
Weight	540 lbs (245 kg)	1300 lbs (590 kg)
Compressor Type	scroll	scroll
Number of Cylinders	n/a	n/a
Pressurization	120 CFM (56 l/s)	120 CFM (56 l/s)
Controls	110 V.A.C.	110 V.A.C.
Motor Protection	Circuit Breaker	Circuit Breaker
	Thermal Overload	Thermal Overload
Compr. Capacity Control	none	none
Condenser Fan	1 speed	1 speed
Refrigerant Metering	TXV	TXV
Thermostat-Electronic 5 Stage	Standard	Standard

Rating Conditions: Cooling Capacity - Indoor 80°F DB/67°F WB with Outdoor 110°F DB/60°F WB

Heating Capacity @ Rated Voltage

For capacities at ARI Std. 210 conditions of cooling capacity, with Indoor 80°F DB/67°F WB and Outdoor 95°F DB/75°F WB add approximately 7.5% to rated capacity.

Above Spec based on 460/30/60 versions heating and coling, capacities may vary depending on supplied voltage.

© 2016 Bergstrom, Inc.

Features

- Heavy gauge stainless steel construction
- Designed for smaller mining cabs and industrial equipment
- Easy installation
- Quiet and efficient scroll compressors
- Two-stage electric heat
- Positively pressurized electrical cubicle to keep dust and water out
- 5-stage electronic thermostat with remote control for operator comfort
- Compatible with new automatic cleaning pressurizer

Suggested Applications

Line Drawing

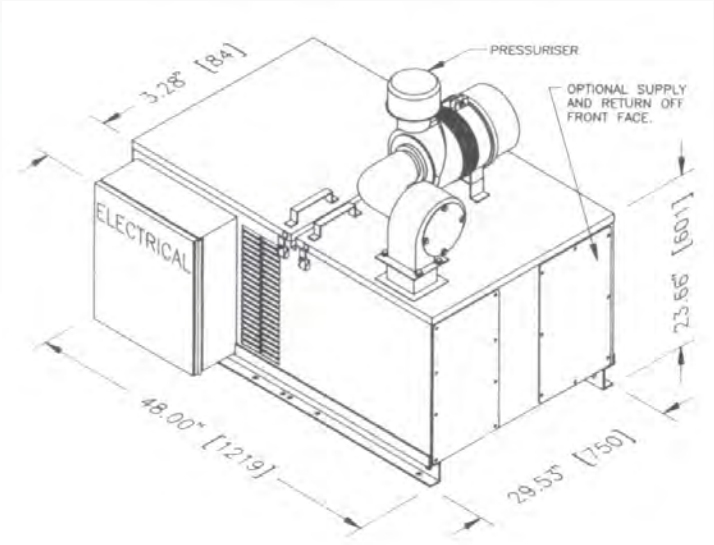

Technical Specifications

Model	MPV5
Power*	Cooling: 18,000 BTU/hr (5,3 kW) Heating: 34,000 BTU/hr (10,0 kW)
Amps	20 AMPS @ 460/3/60
Maximum air flow	High: 600 SCFM (1,019 m³/hr) Low: 500 SCFM (850 m³/hr)
Dimensions (L x W x H)	48in x 32.8in x 23.66in (1,219mm x 833mm x 601mm)
Weight	540 lbs. (244,9 kg)
Mounting Position	Rooftop, Walkway or Deck

(*) System cooling capacity is based on system component-calculated capacities in accordance with IMACA 200 standard test conditions: inddor 80ºF DB/67ºF WB with outdoor 110ºF DB/60ºF WB. Heating capacity is at rated voltage in accordance with SAEJ638.

Measurements are listed using the U.S. system with the metric system in parenthesis.

© 2016 Bergstrom, Inc.

Dimensions layout

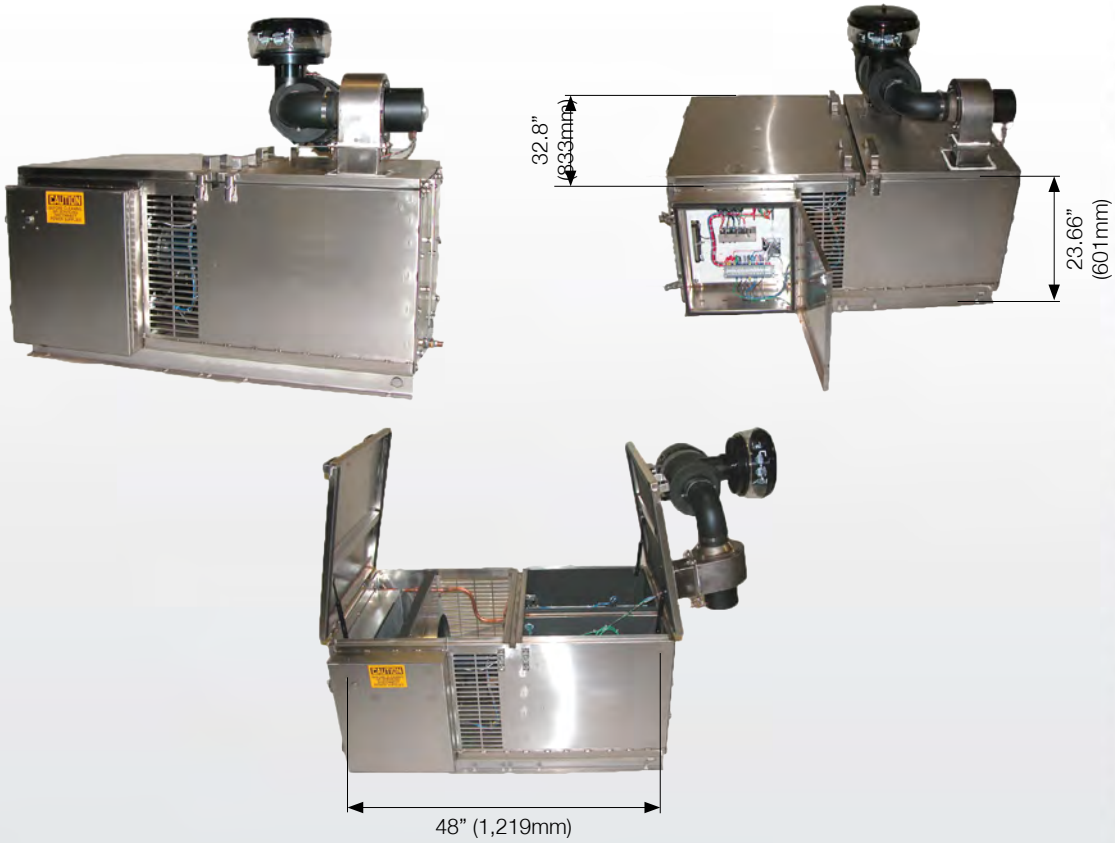

MPV5 HVAC System Order Guide

Part	Part Number	Notes
Unit Part Number*		
Pilot Control Box		

*Before ordering please contact Bergstrom for more details.

Model Specifications:	MPV5
Cooling Capacity	18,000 BTU/hr (5,2 kw)
Heating Capacity	34,000 BTU/hr (10,0 kw)
Heating Stages	2
Airflow - High Speed	600 CFM (280 l/s)
Airflow - Low Speed	500 CFM (240 l/s)
Compressor Type	Scroll
Pressurization	120 CFM (56 l/s)
Controls	110 VAC
Motor Protection	Circuit Breaker
	Thermal Overload
Compressor Capacity Control	None
Condenser Fan	1-Speed
Refrigerant Metering	TXV
Thermostat - Electronic 5-stage	Standard

Rating Conditions: Cooling Capacity - Indoor 80°F DB/67°F WB with Outdoor 110°F DB/60°F WB Heating Capicity @ Rated Voltage

For capacities at ARI Std. 210 conditions of cooling capacity with 80°F DB/67°F WB and Outdoor 95°F DB/75°F WB add approximately 7.5% to rated capacity.

Above spec based on 460/30/60 versions of heating and cooling, capacities may vary depending on supplied voltage.

Bergstrom STANDARD PRODUCTS
2390 Blackhawk Rd.
PO Box 6007
Rockford, IL 61125
866.507.9773
bergstrominc.com

Warranty

- 2-year limited warranty on parts and systems

© 2016 Bergstrom, Inc.

Features

- Heavy gauge stainless steel construction
- Triple-gasketed evaporator cover to elimiate dust and water ingress
- Positively pressurized electrical cubicle to keep dust and water out
- Very easy to service and keep clean
- Quiet operation with large scroll compressor
- Higher capacity to handle increased cooling and heating loads due to increases in amounts of air pressurization
- Head pressure control for cooler cllimate operations without sacrificing performances in hot locations
- No pre-cleaner required since pressurizer intake is from condenser fan intake
- Capacity controls to enhance operation over a wide temperature range
- 5-stage electronic thermostat with remote control for operator comfort
- Compatible with new automatic cleaning pressurizer
- Several power options available

Suggested Applications

BES

Line Drawing

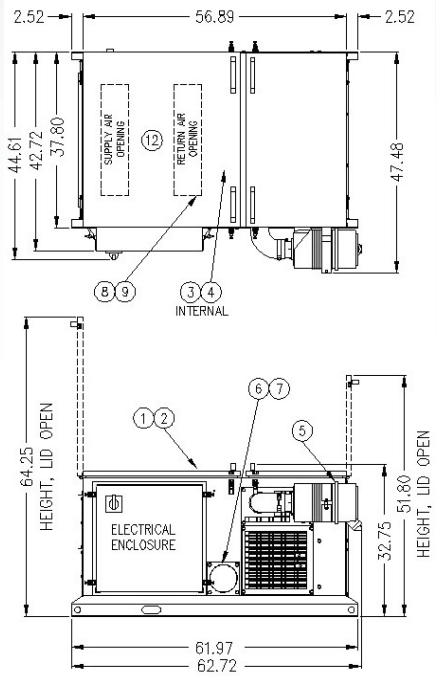

Technical Specifications

Model	MPV9
Power*	Cold: 30,369 BTU/hr (8,9 kW) Hot: 40,946 BTU/hr (12,0 kW)
Amps	25 AMPS @ 460/3/60
Maximum air flow	High: 1.300 SCFM (2,209 m³/hr) Low: 870 SCFM (1,478 m³/hr)
Dimensions (L x W x H)	47.48in x 62.72in x 32.75in (1,206mm x 1,593mm x 832mm)
Weight	1,100 lbs. (499 kg)
Mounting Position	Rooftop, Walkway or Deck

(*) System cooling capacity is based on system component-calculated capacities in accordance with IMACA 200 standard test conditions: inddor 80ºF DB/67ºF WB with outdoor 110ºF DB/60ºF WB. Heating capacity is at rated voltage in accordance with SAEJ638.

Measurements are listed using the U.S. system with the metric system in parenthesis.

© 2016 Bergstrom, Inc.

Dimensions layout

Model Specifications:	MPV5
Cooling Capacity	31,000 BTU/hr (8,9 kw)
Heating Capacity	41,000 BTU/hr (12,0 kw)
Heating Stages	2
Airflow - High Speed	1,300 CFM (610 l/s)
Airflow - Low Speed	870 CFM (410 l/s)
Compressor Type	Scroll
Pressurization	120 CFM (56 l/s)
Controls	110 VAC
Motor Protection	Circuit Breaker
	Thermal Overload
Compressor Capacity Control	None
Condenser Fan	1-Speed
Refrigerant Metering	TXV
Thermostat - Electronic 5-stage	Standard

Rating Conditions: Cooling Capacity - Indoor 80°F DB/67°F WB with Outdoor 110°F DB/60°F WB Heating Capicity @ Rated Voltage

For capacities at ARI Std. 210 conditions of cooling capacity with 80°F DB/67°F WB and Outdoor 95°F DB/75°F WB add approximately 7.5% to rated capacity.

Above spec based on 460/30/60 versions of heating and cooling, capacities may vary depending on supplied voltage.

MPV9 HVAC System Order Guide

Part	Part Number	Notes
A/C Unit Part Number*		380/50/3 or 460/60/3 bottom discharge
Heat Package Unit Number		380/50/3 or 460/60/3
Heater Blanking Plate		Required when heat is not selected
Pressurizer Package		
Pressurizer Blanking Kit		Required when pressurizer is not selected
Standard Return Air Filter Package		
High Efficient Filter Package		
Side Discharge Spigot Package		
Side Discharge Blanking Kit		Required when bottom discharge option is selected
Fresh Air Spigot Kit		4″ Kit 6″ Kit
Fresh Air Blanking Kit		Required when no fresh air spigot is selected
Duct Kit		2/4 ft bottom discharge kit 6/8 ft bottom discharge kit
Control		Control plate remote mounted Control box remote mounted Control door remote mounted Loose controls

*Before ordering please contact Bergstrom for more details.

Bergstrom STANDARD PRODUCTS
2390 Blackhawk Rd.
PO Box 6007
Rockford, IL 61125
866.507.9773
bergstrominc.com

Warranty

- 2-year limited warranty on parts and systems

© 2016 Bergstrom, Inc.

T-Series

Our T-Series, or tractor series, is designed to be used on cabs of various rubber-tired or tracked vehicles; such as haul trucks, small drills and others. The systems are generally 12 or 24 V.D.C. and typically require a remote engine-driven compressor.

Product Data & Specifications

Technical Specifications:					
Model	TBV6	TCR6	TDR5	TPR6	TPW5
Voltage	12V or 24V	12V or 24V			
Cooling Capacity		up to 22,000 BTU/hr (6,4 kW)	18,000 BTU/hr (5,2 kW)	20,473 BTU/hr (6 kW)	18,000 BTU/hr (5,3 kW)
Heating Capacity - Hot Water			35,000 BTU/hr (10 kW)	40,000 BTU/hr (11,7 kW)	40,000 BTU/hr (11,7 kW)
Amps			25 A/h		25 A/h
Airflow - High Speed		2,400 SCFM (4,078 m^3/hr)	400 CFM (190 l/s)	450 SCFM (764.55 m^3/hr)	450 SCFM (764.55 m^3/hr)
Airflow - Medium Speed			350 CFM (165 l/s)		
Airflow - Low Speed			300 CFM (140 l/s)		
Pressurization			110 CFM (50 l/s)		
Condenser Motors			(2) Fully sealed		
Condenser Fans			10" (250 mm)		
Evaporator Motor			(2) Fulle sealed		
Evaporator Fans			(2) Single inlet		
Motor Protection			Circuit Breakers		
Compressor Power				Hydraulic	
Weight	100 lb (45,4 kg)	40 lb (18,1 kg)	150 lb (68 kg)	400 lb (181,4 kg)	375 lb (170 kg)

© 2016 Bergstrom, Inc.

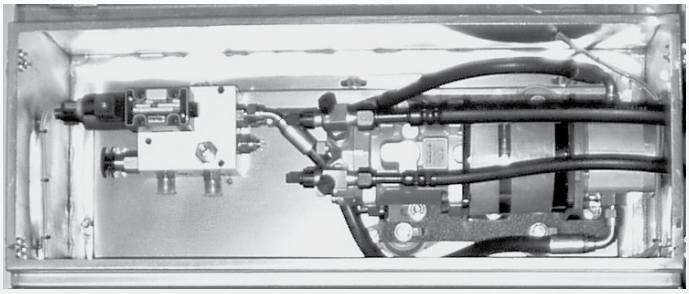

Features

- Heavy-duty stainless steel construction
- Precise hydraulic control
- Direct drive compressor
- Compressor mounted to minimize vibration
- Alternative to an engine mounted compressor

Suggested Applications

Line Drawing

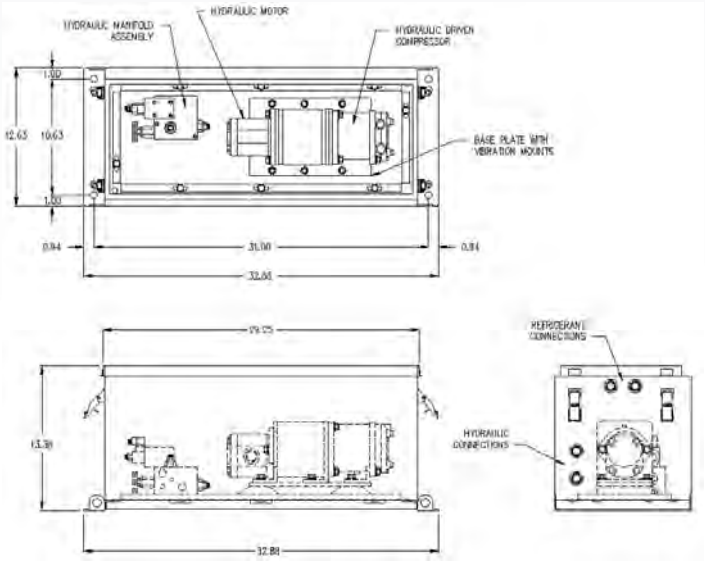

Technical Specifications

Model	TBV6 12V	TBV6 24V
Voltage	12V	24V
Dimensions (L x W x H)	32.88in x 12.63in x 13.38in (835mm x 321mm x 340mm)	32.88n x 12.63in x 13.38in (835mm x 321mm x 340mm)
Weight	100 lbs. (45,4 kg)	100 lbs. (45,4 kg)
Mounting Position	Rooftop or Deck	Rooftop or Deck

Measurements are listed using the U.S. system with the metric system in parenthesis.

Recommended BES Systems: TDR5 (page 145), FFR6 (page 121), TPR6 (page 147),

© 2016 Bergstrom, Inc.

Dimensions layout

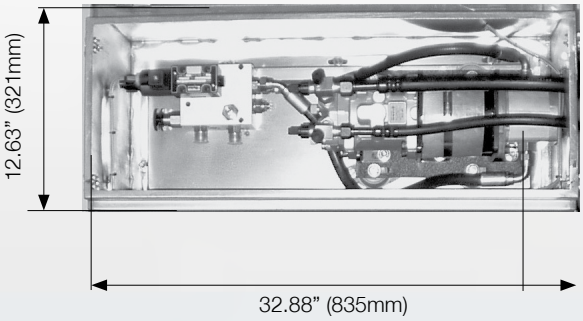

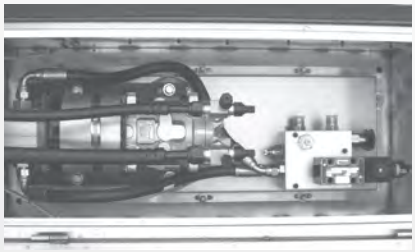

TBV6 Hydraulic Compressor Order Guide

Part	Part Number	Notes
Unit Part Number*	TBV6AX1C TBV6BX1C	12V 24V

*Before ordering please contact Bergstrom for more details.

Bergstrom STANDARD PRODUCTS
2390 Blackhawk Rd.
PO Box 6007
Rockford, IL 61125
866.507.9773
bergstrominc.com

Warranty

- 2-year limited warranty on parts and systems

© 2016 Bergstrom, Inc.

Features

- Heavy-duty stainless steel construction
- No top openings to reduce dirt contamination
- Large coil to keep head pressures low in high ambient conditions
- Horizontal motors for optimal bearing life
- Can be used with evaporators up to 22,000 BTU/hr

Suggested Applications

Line Drawing

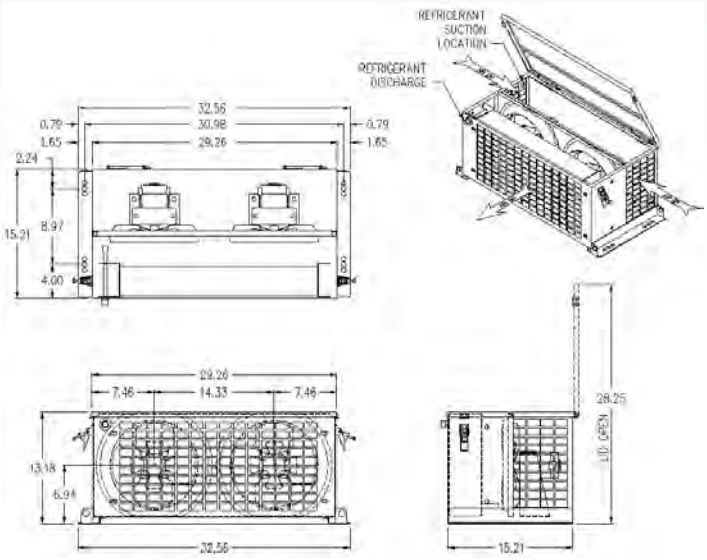

Technical Specifications

Model	TBV6 12V	TBV6 24V
Voltage	12V	24V
Power	For use up to 22,000 BTU/hr (6,4 kW)	For use up to 22,000 BTU/hr (6,4 kW)
Maximum air flow	2,400 SCFM (4,078 m^3/hr)	2,400 SCFM (4,078 m^3/hr)
Dimensions (L x W x H)	32.56n x 15.21in x 13.18in (827mm x 386mm x 335mm)	32.88n x 12.63in x 13.38in (835mm x 321mm x 340mm)
Weight	40 lbs. (18,1 kg)	40 lbs. (18,1 kg)
Mounting Position	Rooftop or Deck	Rooftop or Deck

Measurements are listed using the U.S. system with the metric system in parenthesis.

Recommended BES Systems: FFR6 (page 121), TPR6 (page 147),

© 2016 Bergstrom, Inc.

Dimensions layout

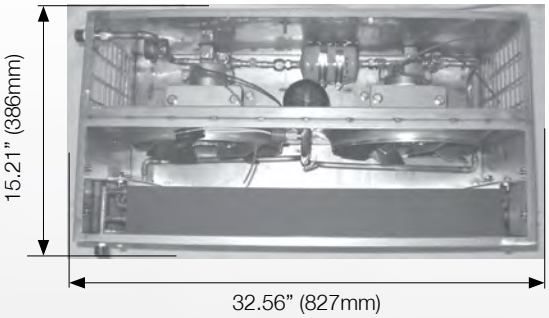

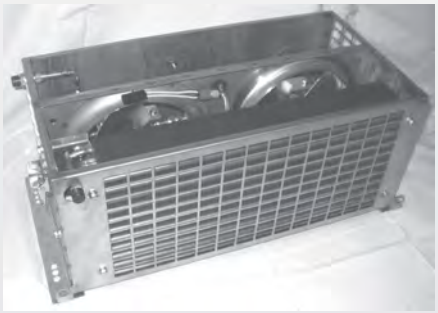

TCR6 Condenser Package Order Guide

Part	Part Number	Notes
Unit Part Number*	TCR6AX1C TCR6BX1C	12V 24V

*Before ordering please contact Bergstrom for more details.

Bergstrom
STANDARD PRODUCTS
2390 Blackhawk Rd.
PO Box 6007
Rockford, IL 61125
866.507.9773
bergstrominc.com

Warranty
- 2-year limited warranty on parts and systems

© 2016 Bergstrom, Inc.

Features

- Heavy gauge stainless steel construction
- Rooftop mount
- Compressor is remote mounted
- Several power options available

Suggested Applications

Line Drawing

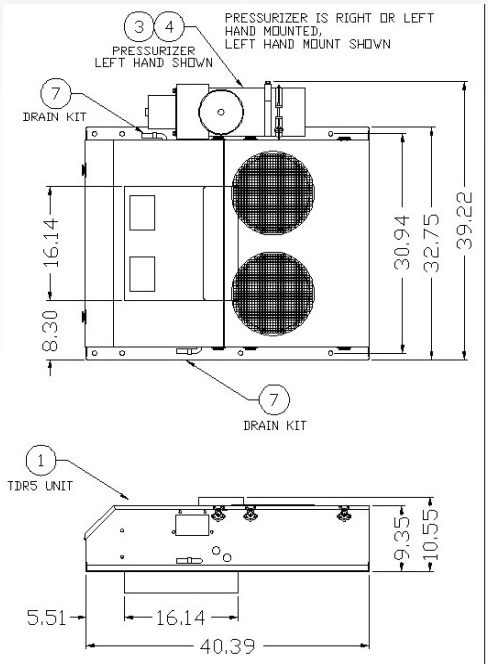

Technical Specifications

Model	TDR5 24V
Power*	Cold: 18,000 BTU/hr (5,2 kW) Hot: 35,000 BTU/hr (10,0 kW)
Amps	25 AMPS @ 24 V.D.C.
Maximum air flow	High: 400 SCFM (680 m^3/hr) Medium: 350 SCFM (595 m^3/hr) Low: 300 SCFM (510 m^3/hr)
Dimensions (L x W x H)	40.39in x 39.22in x 10.55in (1,026mm x 996mm x 268mm)
Weight	150 lbs. (68,0 kg)
Mounting Position	Rooftop

(*) System cooling capacity is based on system component-calculated capacities in accordance with IMACA 200 standard test conditions: inddor 80°F DB/67°F WB with outdoor 110°F DB/60°F WB. Heating capacity is at rated voltage in accordance with SAEJ638.

Measurements are listed using the U.S. system with the metric system in parenthesis.

© 2016 Bergstrom, Inc.

Dimensions layout

Model Specifications:	TDR5
Cooling Capacity	18,000 BTU/hr (5,2 kw)
Heating - Hot Water	35,000 BTU/hr (10,0 kw)
Airflow - High Speed	400 CFM (190 l/s)
Airflow - Medium Speed	350 CFM (165 l/s)
Airflow - Low Speed	300 CFM (140 l/s)
Pressurization	110 CFM (50 l/s)
Condenser Motors	(2) Fully Sealed
Condenser Fans	10” (250mm)
Evaporator Motor	(2) Fully Sealed
Evaporator Fans	(2) Single Inlet
Motor Protection	Circuit Breakers

TDR5 Order Guide

Part	Part Number	Notes
Unit Part Number*		12V A/C unit with plenum 24V A/C unit with plenum
Heat Package		
12V Pressurizer / Filter Standard Package		Left hand mount Right hand mount
Roof Plate		
Plenum Trim Kit		
Drain Kit		
Standard Return Air Filter Package		

*Before ordering please contact Bergstrom for more details.

Bergstrom STANDARD PRODUCTS
2390 Blackhawk Rd.
PO Box 6007
Rockford, IL 61125
866.507.9773
bergstrominc.com

Warranty

- 2-year limited warranty on parts and systems

© 2016 Bergstrom, Inc.

Features

- Heavy-gauge stainless steel construction
- Rooftop mount
- Hydraulic-driven compressor, mounted within the unit
- Outside fan-forced filtration and pressurization system
- Fan-forced condenser assembly
- Designed to provide high levels of air filtration
- Offers climate control through refrigeration for cooling and hot water for heating

Suggested Applications

Line Drawing

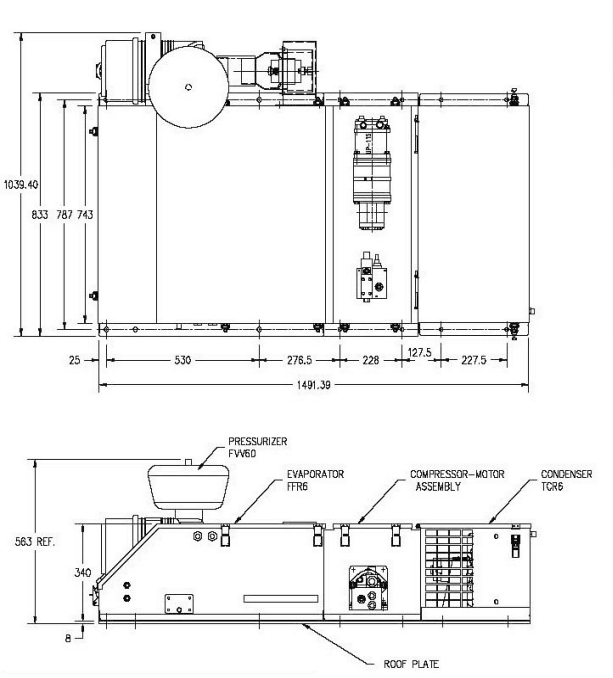

Technical Specifications

Model	TPR6 24V
Power*	Cold: 20,473 BTU/hr (6,0 kW) Hot: 40,000 BTU/hr (11,7 kW)
Maximum air flow	450 SCFM (764.55 m³/hr)
Compressor Power	Hydraulic
Dimensions (L x W x H)	58.72in x 40.92in x 13.39in (1491.39mm x 1,039.4mm x 340mm)
Weight	400 lbs. (181,4 kg)
Mounting Position	Rooftop

(*) System cooling capacity is based on system component-calculated capacities in accordance with IMACA 200 standard test conditions: 100°F and 81°F FDB/67°F FWB (38°C and 27/19°C) return air.

Measurements are listed using the U.S. system with the metric system in parenthesis.

© 2016 Bergstrom, Inc.

Dimensions layout

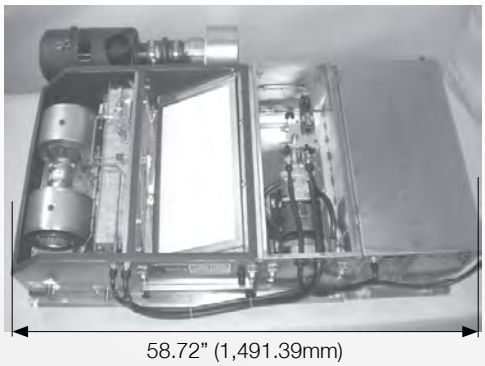

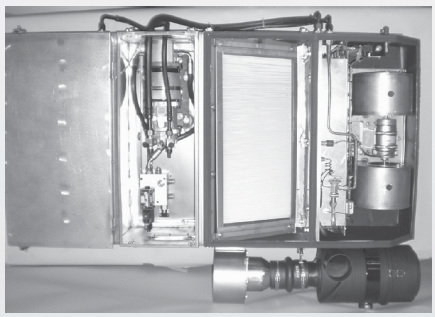

TPR6 A/C System Order Guide

Part	Part Number	Notes
Unit Part Number*	TPR6BX1C	24V

*Before ordering please contact Bergstrom for more details.

Bergstrom
STANDARD PRODUCTS

2390 Blackhawk Rd.
PO Box 6007
Rockford, IL 61125
866.507.9773
bergstrominc.com

Warranty

- 2-year limited warranty on parts and systems

© 2016 Bergstrom, Inc.

Features

- Heavy gauge stainless steel construction
- Hydraulic driven compressor
- High efficiency, servicable filter to ensure extremely clean air is supplied to the cab
- Electronic temperature control
- Precise hydraulic control

Suggested Applications

Line Drawing

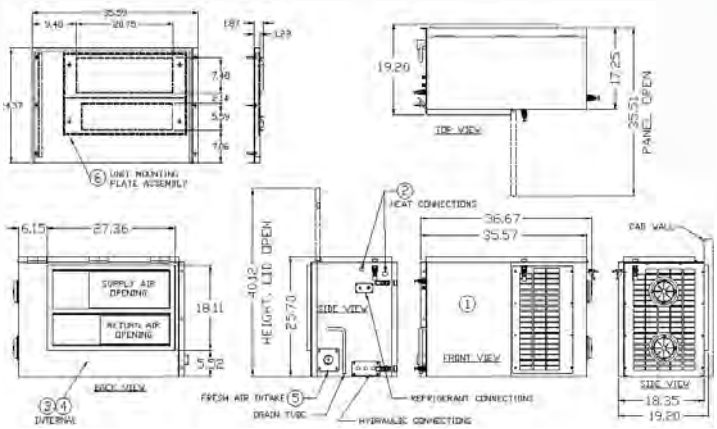

Technical Specifications

Model	TPW5 24V
Power*	Cold: 18,000 BTU/hr (5,3 kW) Hot: 40,000 BTU/hr (11,7 kW)
Amps	25 AMPS @ 24 V.D.C.
Maximum air flow	450 SCFM (765 m³/hr)
Dimensions (L x W x H)	36.67in x 19.2in x 25.7in (931.4mm x 487.7mm x 652.8mm)
Weight	375 lbs. (170 kg)
Mounting Position	Deck

(*) System cooling capacity is based on system component-calculated capacities in accordance with IMACA 200 standard test conditions: 100°F and 81°F FDB/67°F FWB (38°C and 27/19°C) return air.

Measurements are listed using the U.S. system with the metric system in parenthesis.

© 2016 Bergstrom, Inc.

Dimensions layout

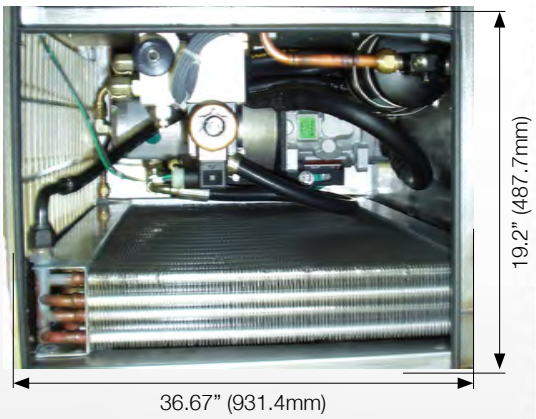

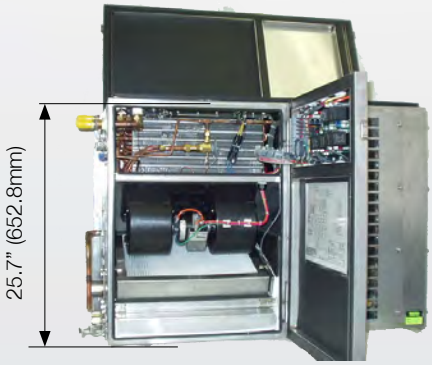

TPW5 A/C System Order Guide

Part	Part Number	Notes
Unit Part Number		24V
Heat Package		
Standard Filter Package		
High Efficient Filter Package		
Fresh Air Nozzle Kit		
Mounting Plate Assembly		
24 V Plenum		

Bergstrom STANDARD PRODUCTS
2390 Blackhawk Rd.
PO Box 6007
Rockford, IL 61125
866.507.9773
bergstrominc.com

Warranty
- 2-year limited warranty on parts and systems

© 2016 Bergstrom, Inc.

Index

Numbers
3620002 10
3620003 10
3620007 10
B
BSP00001AC12 26
BSP00001AC24 26
BSP00002HVAC12 52
BSP00002HVAC24 52
BSP00003COND12 84
BSP00003COND24 84
BSP00003HVAC12 70
BSP00003HVAC24 70
BSP00004COND12 86
BSP00004COND24 86
BSP00004HEAT12 104
BSP00005AC12 14
BSP00005AC24 14
BSP00005COND12 92
BSP00005COND24 92
BSP00006AC24 18
BSP00006HVAC12 40
BSP00006HVAC24 40
BSP00007AC12 50
BSP00007AC24 50
BSP00007HVAC12 78
BSP00007HVAC24 78
BSP00008AC12 68
BSP00008AC24 68
BSP00009AC12 38
BSP00009AC24 38
BSP00009COND12 100
BSP00010AC12 76
BSP00010AC24 76
BSP00010COND12 82
BSP00010COND24 82
BSP00011COND12 98
BSP00011COND24 98
BSP00012AC12 44
BSP00012AC24 44
BSP00012COND12 96
BSP00013COND12 88
BSP00013HEAT12 112
BSP00013HEAT24 112
BSP00014COND12 90
BSP00014COND24 90
BSP00014HVAC12 62
BSP00014HVAC24 62
BSP00015AC12 46
BSP00015HEAT12 106
BSP00015HEAT24 106
BSP00016COND12 94
BSP00016COND24 94
BSP00016HEAT12 108
BSP00016HEAT24 108
BSP00016HVAC12 72
BSP00016HVAC24 72
BSP00018HEAT12 110
BSP00018HEAT24 110
BSP00024AC12 20
BSP00024AC24 20
BSP00025AC12 64
BSP00025AC24 64
BSP00026AC12 60
BSP00026AC24 60
BSP00028AC12 30
BSP00028AC24 30
BSP00029AC12 28
BSP00029AC24 28
BSP00030AC12 16
BSP00031AC12 32
BSP00032AC12 32
BSP00032AC24 32
BSP00033AC24 32
BSP00034AC12 32
BSP00034AC24 32
BSP00035AC12 54
BSP00035AC24 54
BSP00036AC12 74
BSP00036AC24 74
BSP00037AC12 56
BSP00038AC12 58
BSP00039AC12 42
BSP00039AC24 42
BSP00040AC12 22
BSP00040AC24 22
BSP00042AC12 24
BSP00042AC24 24
BSP00044AC12 36
C
Compact 1.4 13
Compact 2.0 15
Compact 3.0 17
D
DBAC-100 19
DBAC-200 21
DBC-100 81
Dinamic 23
F
Farad 35
FFR6 119
FFR6-12 122
FFR6-24 122
FFR6 Pressurizer 121
FVF120 119
FVF120-12 124
FVF120 Pressurizer 123
FVV50 119
FVV50-12 126
FVV50-24 126
FVV50 Pressurizer 125
FVV60 119
FVV60-12 128
FVV60-24 128
FVV60 Pressurizer 127
FVV150 119
FVV150-12 130
FVV150-24 130
FVV150 Pressurizer 129
FVW100 119
FVW100-24 132
FVW100-120 132
FVW100 Pressurizer 131
H
HD-1000 A/C 37
HD-1000, Black Hardware Kit 115
HD-1000 HVAC 39
I
Integral Power ATC 25
Integral Power ATC Hatch . . 27
Integral Power Manual 29
K
KA-300 41
KA-300, Black Hardware Kit 115
KA-400 SlimLine 49
KA-500 HardHat 53
KA-550 67
KA-710 SideKick 73
KA-2000 43
KA-3000 45
KA-7100 55
KA-7300 57
KC-90 83
KC-90, Black Hardware Kit 115
KC-110 85
KC-110, Black Hardware Kit 115
KC-440 87
KC-500 89
KC-750 91
KC-800 Super Air 93
KC-900 Super Air Plus 95
KC-1010 97

© 2016 Bergstrom, Inc.

KC-3000 99
Kelvin A/C 59
Kelvin Fascia Options
and Brackets. 116
Kelvin HVAC 61
KH-150. 103
KH-200 105
KH-300 107
KH-500 109
KK-400 SlimLine. 51
KK-550 69
KK-600 BackPack. 71
M
MPV5 . . . . . 133, 136
MPV5 HVAC System 135
MPV9 133
MPV9 HVAC System 137
MPV9MX12C 138
N
NITE® Phoenix 9
P
Pascal A/C 63
Pascal Fascia Options
and Brackets. 116
Pascal Heater 111
S
Split 2.0 and 3.0 31
T
TBV6AX1C. 142
TBV6BX1C. 142
TBV6 Hydraulic
Compressor 141
TCR6AX1C 144
TCR6BX1C. 144
TCR6 Condenser
Package 143
TDR5AX5C 146
TDR5BX5C 146
TDR5 HVAC System 145
TPR6 A/C System 147
TPR6BX1C. 148
TPW5BX5C 150
TPW5 HVAC System 149
V
Vertical Grande A/C 75
Vertical Grande HVAC 77

© 2016 Bergstrom, Inc.

Bergstrom Standard Products
Customer Service toll free: 800.499.6849
Address: 2390 Blackhawk Road · Rockford, IL · 61109
Website: bergstrominc.com

Warranty Information

Please refer to the Bergstrom website for complete warranty details and claim information.

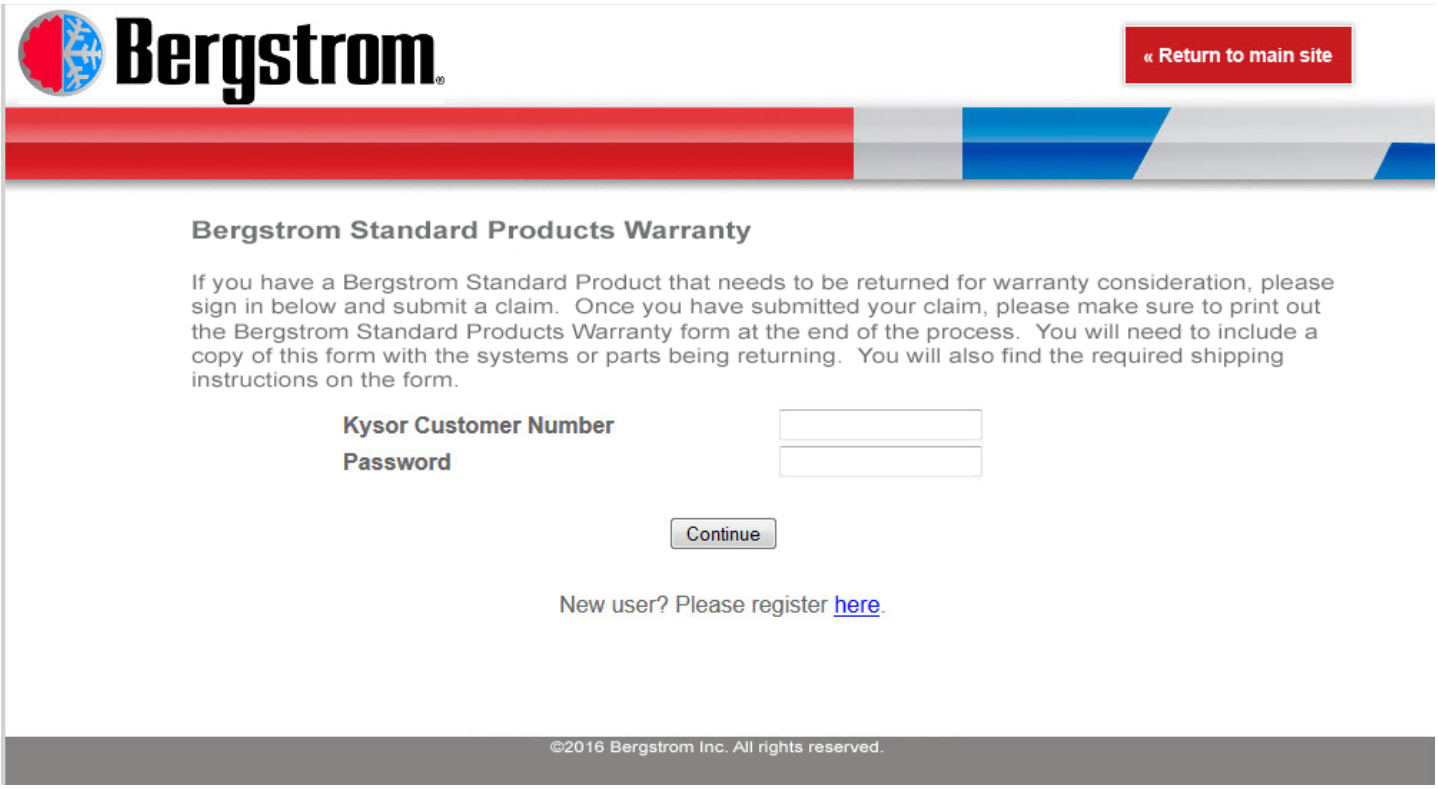

Fill in your Kysor customer number and password in the space above so you will always have the information available.

Regional Sales Manager Map

For the most current territory map, please refer to bergstrominc.com/contact-kysor-sales.

Innovating climate solutions
for the people who move our world.

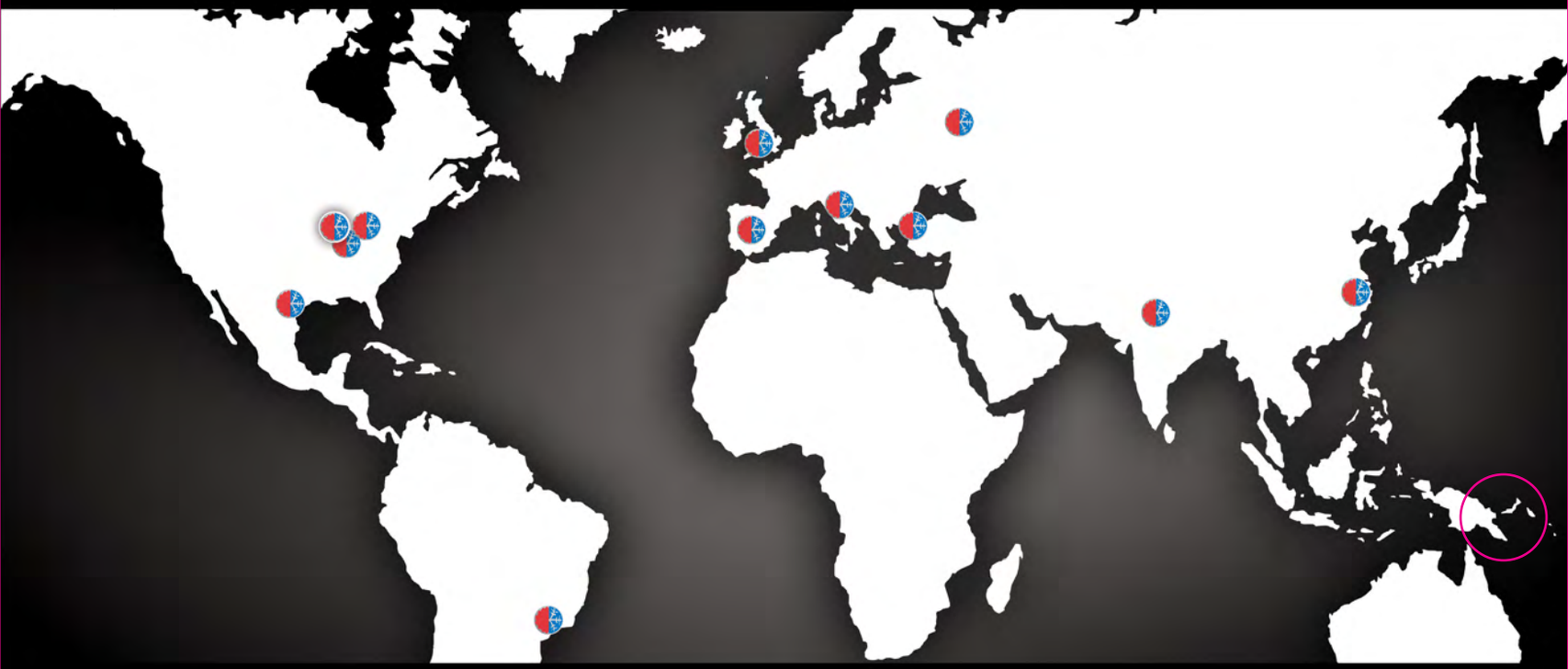

©2016 Bergstrom, Inc.
Part # BERG-C-BSPS-16R1-EN-B

Bergstrom

Bergstrom, Inc. | 2390 Blackhawk Rd. | P.O. Box 6007 | Rockford, IL 61107
bergstrominc.com